Commodore

06. April 1992

CDTV

Service Manual

05.91

Amiga

Commodore

Produced By:

Commodore International Spare Parts GmbH
Braunschweig, West Germany

SERVICE MANUAL

CDTV

MAY, 1991 **PN-400403-01**

INTERNATIONAL EDITION
SERVICE POLICY AND PART NUMBER INFORMATION MAY VARY ACCORDING TO COUNTRY. SOME PARTS MAY NOT BE AVAILABLE IN ALL COUNTRIES.

Commodore Business Machines, Inc.
1200 Wilson Drive, West Chester, Pennsylvania 19380 U.S.A.

Commodore makes no express or implied warranties with regard to the information contained herein. The information is made available solely on an as is basis, and the entire risk as to completeness, reliability, and accuracy is with the user. Commodore shall not be liable for any damages in connection with the use of the information contained herein. The listing of any available replacement part herein does not constitute in any case a recommendation, warranty or guaranty as to quality or suitability of such replacement part. Reproduction or use without express permission, of editorial or pictorial content, in any matter is prohibited.

This manual contains copyrighted and proprietary information. No part of this publication may be reproduced, stored in a retrieval system, or transmitted in any form or by any means, electronic, mechanical, photocopying, recording or otherwise, without the prior written permission of Commodore Electronics Limited.

Copyright © 1991 by Commodore Electronics Limited.

TABLE OF CONTENTS

SECTION 1 — SPECIFICATIONS

1.1 SPECIFICATIONS 1-1

SECTION 4 — PARTS

SHIPPING ASSEMBLIES 4-1

MAJOR ASSEMBLIES 4-2

PCB COMPONENTS 4-3

SECTION 5 — SCHEMATICS

SCHEMATIC #252605, REV. A 5-1

SECTION 1

SPECIFICATIONS

1.1 SPECIFICATIONS

CENTRAL PROCESSING UNIT
MC68000 (Motorola) 16/32 bit main CPU

CPU SPEED
7.15909 MHz (NTSC); 7.09379 MHz (PAL)
NOTE: CPU speeds can vary when using an external system clock such as with genlocking units.

CUSTOM CHIPS
3 Amiga-specific custom chips (Agnus, Paula and Denise) which enhance system performance by taking over tasks such as handling video, sound, direct memory access (DMA) and/or graphics.

OTHER CUSTOM CHIPS
CDTV will also have other custom chips for handling the CD-ROM interface and IR control.

MEMORY
1 MB (Megabyte) chip RAM; 2K non-volatile RAM reserved for system (clock, prefs, etc.); 512K ROM

INTERNAL SLOTS
Intelligent video slot (for optional genlock, RF board, etc.) 15 pin edge connector; DMA slot — for SCSI, LAN, etc.

VIDEO OUTPUTS
Analog RGB, Digital RGB (DB-23 connector); Composite video NTSC or PAL (RCA connector); Component video Y-C (S connector type for S-VHS and Hi8); RF Modulated (F connector); Optional genlock capabilities via plug-in module. Three-mode (CDTV, video source or mixed) under software control.

VIDEO DISPLAY (GENERAL)
400 lines/vertical frequency 60Hz (NTSC); 512 lines/vertical frequency 50Hz (PAL); Graphic co-processor with beam synced draw, fill and move modes (blitter); Maximum 1Mb video memory (chip memory); Palette of 4096 colors; Maximum 6 bitplanes; 8 sprites per scanline

OPERATING SYSTEM
Amiga kickstart 1.3 in ROM; ISO 9660 file system handler; High-speed decompression for graphics, audio and other data; CD+G, CD+midi, CDDA support

IR (INFRARED) REMOTE UNIT SPECS
Landscape format
Proprietary high-speed IR signal; Power supplied by 2 AA batteries; 10 numeric keys plus Escape and Enter; Joy/Mouse, CD/TV and Genlock keys; Button for Up, Down, Left, Right and diagonal movement; Two Select (or Fire) keys : A and B; CD audio — Reverse, Forward, Play/Pause, Headphone Volume Up-Down and Stop keys

OPTIONAL ACCESSORIES
External floppy disk drive; Trackball; Personal RAM or ROM card; Genlock; Keyboard; Modem

ADDED RAW KEYBOARD CODES
6C Play/Pause; 6D Stop; 6E Fast Forward; 6F Fast Reverse

MEMORY MAP (IN ADDITION TO 1M CHIP A500)

Memory Card	$E00000-$E000FF
Non-volatile Memory	$DC8000
DMAC	Auto config., typically $E90000
Tri-port	Mapped to DMAC, $B0

COMPUTER GENERATED AUDIO SPECS
4 independent sound channels (right and left); Complex waveforms; Sound buffer up to 128K, unlimited seamless sound; 8-bit D/A converter plus 6-bit volume control

AUDIO EXTRAS
Capable of sound mapping Amiga over CD-DA sound.

1.1 SPECIFICATIONS (Continued)

REAR PORTS

Centronics parallel interface; RS-232 serial interface; External floppy disk drive interface (Amiga floppy disk drive compatible); Hardwired alternative to IR for keyboard, mouse, joystick; 2 audio output ports (RCA type plug) (requires external audio amplifier); Midi in and out

FRONT PORT

Stereo headphone jack; Port for optional personal RAM/ROM card (256K)

POWER CONSUMPTION

50W (average AC100-240V, 50/60Hz)

ENVIRONMENTAL CONDITIONS

Operating temperature	5C to 40C (non-condensing); 41F to 104F
Operating humidity	25% to 80% (non-condensing)

FRONT PANEL DISPLAY

Fluorescent (white characters on black); Time, track and volume level; Clock remains lit when unit is turned off; Display controllable by application

FRONT PANEL CONTROLS

Power On/Off; Headphone volume Up/Down; Play/Pause; Stop; Forward/Reverse — Scan/Skip; CD/TV; Reset

TEXT MODES

80 characters/25 lines; 60 characters/25 lines; Various font sizes and types selectable; Screen colors user definable

GRAPHICS MODES

(NTSC)		*(PAL)*	
320 X 200 non-interlaced	32 colors	320 X 256 non-interlaced	32 colors
640 X 200 non-interlaced	16 colors	640 X 256 non-interlaced	16 colors
320 X 400 interlaced	32 colors	320 X 512 interlaced	32 colors
640 X 400 interlaced	16 colors	640 X 512 interlaced	16 colors
plus overscan and HAM modes		plus overscan, HAM, etc.	

CD-ROM DRIVE SPECS

Sony/Philips type CD-ROM standard Mode 1, Mode 2

Data readout from disk	153 Kbytes/sec (Mode 1); 171 Kbytes/sec (Mode 2); 2 Megabytes/sec (burst)
Average access time	0.5 sec
Maximum access time	0.8 sec
Soft read error	Less than 10e-9
Hard read error	Less than 10e-12
Seek error	Less than 10e-6
Commands	CD-ROM, CD-Audio, CD+G
MTBF	10,000 P.O.H.
Standard supported	ISO-9660
Data Capacity	540 MegaBytes (approx.) (about 700 Amiga floppy disks)

CD AUDIO SPECS

8X oversampling

Audio output	External 1.4VRMS, 10K OHM
Frequency response	4-20KHz
Signal/Noise	−92DB
Channel Separation	−85DB
Harmonic Distortion	0.02% at 1 KHz
Maximum audio capacity	about 28 hours - AM quality
Sample Rates	variable from CD Audio rate (44KHz) to 6KHz

Dual 16 bit D/A converter plus 64 levels of attenuation

SECTION 4

PARTS

Commodore International Spare Parts List
SHIPPING ASSEMBLIES

Commodore part numbers are provided for reference only and do not indicate the availability of spare parts from Commodore. Industry standard parts (Resistors, Capacitors, Connectors) should be secured locally. Part number information may vary according to country, some parts may not be available in all countries. Part Numbers are subject to change, see Parts (Section 2) of current Techtopics for current numbers.

CDTV SHIPPING ASSY	
513402-01	US
513402-02	CN
513402-03	U.K.
513402-04	GR
513402-05	NOT USED, USE -04
513402-06	IT
513402-07	NOT USED, USE -06
513402-08	SG
513402-09	NOT USED, USE -06
513402-10	NOT USED, USE -06
513402-11	NOT USED, USE -06
513402-12	SO
513402-13	NOT USED, USE -08
513402-14	NOT USED, USE -06
513402-15	NOT USED, USE -06
513402-16	NOT USED, USE -06
513402-17	NOT USED, USE -06
513402-18	AL
513402-19	NOT USED, USE -06
513402-20	NOT USED, USE -06
513402-21	JP
368082-02	GUIOE, QUICK CONNECT
250802-01	MAIN ASSY COA-1, NTSC
250802-02	MAIN ASSY COA-1, PAL-I
250802-04	MAIN ASSY COA-1, PAL-G

CDTV SHIPPING ASSY *(Continued)*	
363713-02	MODULATOR, COTV PAL
363713-01	MOOULATOR, COTV NTSC
903508-07	CORO, POWER BSI BLACK
903508-18	CORD, POWER UL/CSA BLACK
903508-01	CORO, POWER VOE BLACK
903508-02	CORO, POWER SEV BLACK
903508-03	CORO, POWER SAA BLACK
903508-10	CORO, POWER JP BLACK
390875-01	AUTO RF SWITCH BOX NTSC
251846-01	CABLE, RF PAL
325228-01	RF SWITCH SD
252590-01	CO CADDY
252594-01	REMOTE CONTROLLER CDTV
252592-01	BOX, INDIVIOUAL CDTV
252593-01	CARTON, OUTER CDTV
252649-01	BOX, ACCESSORY
252595-01	FOAM, PACKING - FRONT
252596-01	FOAM, PACKING - REAR
311945-01	CABLE AUOIO
400807-01	SVC SUB ASSY
318882-01	CARO, WARRANTY, CN
368014-01	CARO, WARRANTY, AL
320408-04	BAG, FLAT 650MM X 650MM FOR CDTV
324257-01	BAG, DRYING AGENT
367669-01	OISK ASSY — CO WELCOME OISK

Commodore International Spare Parts List
MAJOR ASSEMBLIES

Commodore part numbers are provided for reference only and do not indicate the availability of spare parts from Commodore. Industry standard parts (Resistors, Capacitors, Connectors) should be secured locally. Part number information may vary according to country, some parts may not be available in all countries.

250802	MAIN ASSY CDTV
250802-01	NTSC
250802-02	PAL-I
250802-03	SECAM
250802-04	PAL-G
250802-05	BLANK CARD
250802-06	SCART
250803-01	BDTTDM CHASSIS ASSY CDTV NTSC
250803-02	BDTTOM CHASSIS ASSY CDTV PAL
255077-01	LABEL, RATING CDTV
366567-01	LA8EL, SERIAL#
366565-01	LA8EL, LASER CAUTIDN
325090-02	SEAL, WARRANTY
366566-01	LA8EL, OISK CAUTION
252665-01	INSULATION SHEET, FLASH MEMDRY
252587-01	CDVER, TDP CDTV
252651-01	VIOEO CARO, NTSC
390891-01	VIDED CARD, PAL FDR 250802-02 SET SW TD PAL-I
390932-01	VIDED CARD, SECAM FDR 250802-04 SET SW TO PAL-G ON VIDEO CARO 390891-01
363714-01	VIOEO SCART CARD
906883-03	SCREW, SELF TAPPING PAN HEAD M3 X 6 (OTY = 2)
252466-02	SCREW, SELF TAPPING BIND HEAD M4 X 6 (DTY = 4)
906800-05	SCREW, PAN HEAD M3 X 6 (QTY = 2)

250803	BOTTOM CHASSIS ASSY CDTV (-01 — NTSC; -02 — PAL)
250804-01	CDROM MECHANISM ASSY COTV
250482-01	PCB ASSY MEMDRY CARD
252583-01	BOTTDM CHASSIS CDTV
250806-01	PDWER SUPPLY ASSY CDTV
252564-01	8RACKET METAL REG MKE TOP
252584-01	FOOT CDTV W/ HOT STAMP
252585-01	FODT RUBBER CDTV
252635-01	RUBBER BUSHING
252641-01	CABLE TIE
250484-01	PCB ASSY MAIN LDGIC CDTV NTSC
250484-02	PCB ASSY MAIN LDGIC CDTV PAL
250485-01	PCB ASSY MIDI INTERFACE
250805-01	REAR PANEL ASSY CDTV
250807-01	FRDNT BEZEL ASSY CDTV
390918-01	HOLDER BOTTOM CHASSIS
906883-03	SCREW PAN HEAD M3 X 6
906883-04	SCREW PAN HEAD M3 X 10
390903-01	SCREW ST PH M3 X 6 8LACK
251449-02	SCREW ST PH M4 X 8
251541-04	SPRING WASHER M4
905665-04	LDCK WASHER EXT TDDTH M4
906883-01	SCREW ST PH M3 X 8
906885-02	SCREW ST M2.2 X 6
906670-03	SCREW M2.2 X 6

250806-01	POWER SUPPLY ASSY CDTV
252560-01	REGULATOR SWITCHING MKE
252562-01	BRACKET METAL REG MKE BOTTOM
252632-01	SHEET INSULATIDN POWER SUPPLY
252636-01	HARNESS ASSY PDWER MKE
252637-01	HARNESS ASSY CDROM POWER
252638-01	HARNESS ASSY POWER SWITCH
906885-02	SCREW STP PH M2.6 X 6
907272-07	WASHER FLAT M2.6
251541-07	WASHER SPRING M2.6

250804-01	CDRDM MECHANISM ASSY CDTV
252554-01	CDRDM MECHANISM CR511-B MKE
252555-01	METAL BRACKET HDLDER MAIN LDGIC
252557-01	PLASTIC GUIDE OPTION CARD
252576-02	HARNESS ASSY 40 PIN FLAT CABLE
252639-01	HARNESS ASSY AUDIO CONTROL
906883-01	SCREW STP PH M3 X 8
252634-01	STAND DFF LDGIC PCB (TD BE PRESSED BY MFG.)
252556-01	8UTTON EJECT CR 5118 MKE
252667-01	HDLDER INSULATIDN SHEET

250486-01	PCB ASSY, FLASH MEMORY
252658-01	SCHEMATIC FLASH MEMDRY FRDM AER
252659-01	PCB FLASH MEMDRY

250805-01	REAR PANEL ASSY COTV
252549-01	PANEL REAR CDTV
325552-06	CDNN PDWER FILTER
252551-01	FAN
252631-01	GASKET FAN
252552-01	METAL CDVER SCSI SLOT W/O CARD
252640-01	HARNESS ASSY FAN
252553-01	HARNESS ASSY AC INPUT
905476-04	TUBING HEAT SHRINKABLE 4 DIA X 40 L
1540010-04	GRDUND CABLE ASSY GREEN/YELLDW
906800-11	SCREW PH M3 X 35 8LACK
906800-05	SCREW PH M3 X 6 BLACK
905960-03	NUT HEXAGON M3
906805-01	SCREW STP FLAT HEAO M3 X 6 8LACK
907272-01	FLAT WASHER M3

250807-01	FRONT BEZEL ASSY CDTV
252566-01	FRONT BEZEL CDTV
252567-01	DODR CADDY CDRDM DRIVE
252568-01	SPRING DOOR CADDY
252569-01	PLASTIC FILTER FL DISPLAY
250481-01	PCB ASSY PDWER SW & PHDNE JACK
252571-01	DOOR MEMDRY CARD
252572-01	LENS PLASTIC LED
252573-01	BUTTDN PDWER SWITCH
252574-01	PLASTIC SWITCH UNIT
250483-01	PC8 ASSY LED INOICATOR GREEN
250669-01	FLEXIBLE BUSHING
252666-01	HDLDER FRDNT BEZEL
252668-01	NYLON WASHER
906115-01	TOROID
252570-01	PLATE LOGO CDMMDDDRE
250479-01	PCB ASSY DISPLAY CDTV
252630-01	PLASTIC PCB HDLDER SW AND PHONE JACK
906885-01	SCREW STP PH M2.6 X 8
906883-01	SCREW STP PH M3 X 8
906883-04	SCREW STP PH M3 X 10

250485-01	PCB ASSY MIDI INTERFACE
252625-01	SCHEMATIC MIDI INTERFACE
252626-01	PCB MIDI INTERFACE
252166-03	CONN 5 PIN DIN
252664-01	PCB HDLDER PLASTIC
252628-01	HARNESS ASSY MIDI INTERFACE

250483	PCB ASSY LED INOICATOR (-01 — GREEN; -02 — AMBER)
252598-01	PCB LED INDICATDR
325521-07	LED GREEN 5 DIA RDHM
325521-04	LED GREEN 5 DIA SHARP
252621-02	LED AMBER 5 DIA RDHM SLH 56YC
252621-01	LED AMBER 5 DIA SHARP
252582-02	HARNESS ASSY 2 CDNDUCTDR

250481-01	PCB ASSY POWER SWITCH AND PHDNE JACK
252578-01	PCB POWER SW ANO PHONE JACK
252579-01	HEADPHDNE JACK 6.43 DIA PC MDUNT TANAKA ELEC
252580-01	SWITCH POWER PC MOUNT EXCELL ELEC
252581-01	HARNESS ASSY SHIELDED 2 CONDUCTORS
252582-01	HARNESS ASSY 2 CONDUCTORS
252629-01	PLATE GRDUND SW AND PHDNE JACK

250482-01	PCB ASSY MEMORY CARD
252575-01	PC8 MEMORY CARD
252576-01	HARNESS ASSY FLAT CABLE 40 PIN
252577-01	CDNN MEMDRY CARD ITT CANNDN
252645-01	CDPPER TAPE 15MM WIDTH

250479-01	PCB ASSY DISPLAY CDTV
252537-01	SCHEMATIC DISPLAY CDTV
252642-01	PCB DISPLAY CDTV
252538-01	PCB DISPLAY CDTV
252539-01	IR RECEIVER MODULE SHARP
252546-01	RU88ER OISPLAY T = 5
252540-01	FL DISPLAY CPF2423A NDRITAKE

250484	PCB ASSY MAIN LDGIC CDTV (-01 — NTSC; -02 — PAL)
252604-01	PCB FAB MAIN LOGIC CDTV

Commodore International Spare Parts List
PCB Components
PCB Assembly CDTV

Commodore part numbers are provided for reference only and do not indicate the availability of spare parts from Commodore. Industry standard parts (Resistors, Capacitors, Connectors) should be secured locally. Part number information may vary according to country, some parts may not be available in all countries.

IC COMPONENTS		
390084-03	68000 CPU 8MHZ	U51
318072-01	GARY 5917	U12
252126-02	OENISE 8362R8	U8
252127-02	PAULA 8364R7	U4
315093-02	ROM KICKSTART V1.3	U13
318029-03	CIA 8520 A-1 2 MHZ	U9,10
390229-01	VIDEO HY8RIO	HY1
318099-01	ORAM 256K X 4 100NS ZIP	U65-72
318099-05	ORAM 256K X 4 80NS ZIP	SU8 FOR 318099-01
318069-02	F. AGNUS 8372	U44
390563-02	OMAC 4701	U36
252606-01	ROM COROM ORIVER, OOD	U35
252607-01	ROM COROM ORIVER, EVEN	U34
252608-01	CPU LC6554H	U62
252609-02	CPU 6500/1	U75
318073-01	RTC MSM62428	U61
252611-01	AMP M51568FP	U16
252612-01	ATT TC9154AP	U19
901523-01	TIMER NE555	U76
390086-01	AMP TL084/LF347	U5,6
901523-10	AMP TL082/LF353N	U18
901879-03	TRI-PORT 6525B	U32
252614-01	DAC LC7883M	U17
328156-02	RESET PST518B	U56,82
252620-01	SRAM 16K SK OIP 100NS	U78,79
252620-02	SRAM 16K SK OIP 120NS	SU8 FOR -01
252620-03	SRAM 16K SK SIP 150NS	SU8 FOR -01
901521-29	74LS373	U46,48
901521-16	74LS138	U49,50
318050-01	74F244	U54,55
901521-11	74LS157	U7
310003-01	74HC245	U1,2
901882-01	1488	U3
901883-01	1489	U11
901521-28	74LS164	U31
901521-52	74LS293	U42
901521-06	74LS74	U24,28
390110-01	74F04	U14
901521-46	74LS245	U52,53
901521-38	74LS38	U15
901521-31	74LS32	U22,25,39,73
901521-03	74LS08	U21,80
901522-30	7407	U27,37
901521-22	74LS27	U41,43,64
901521-02	74LS04	U26,40,63,58
901521-21	74LS02	U23,30,74
901521-01	74LS00	U29,81
901521-13	74LS244	U45,47,57,59,60,77
318066-01	74F00	U38
IC SOCKETS		
390185-01	84 PIN PLCC	XU36,44
390141-01	64 PIN SOIP	XU62
904150-10	64 PIN OIP	XU51
251313-02	48 PIN OIP	XU4,8,12
904150-06	40 PIN OIP	XU9,10,13,32,75
390768-02	32 PIN DIP MCH TOOL	XU34,35
252600-01	HOLOER CONN CARTRIOGE	
200966-02	TRANSFORMER OC-OC CONV	T1
CONNECTORS		
390851-03	OIN MINI 5PIN	CN7
390242-03	D SUB 23 PIN MALE	CN4
390241-03	D SUB 23 PIN FEMALE	CN1
390242-05	D SUB 25 PIN MALE	CN2
390241-05	D SU8 25 PIN FEMALE	CN3
252602-01	CARD EDGE 30 PIN 2.54 PITCH	CN10,11
252617-11	KEL 8811 SERIES 170L	CN12
252603-10	HOUSING MOLEX 52007	CN14,15,16
252122-02	RCA JACK REO	CN6
252122-01	RCA JACK WHITE	CN5

CONNECTORS *(Continued)*		
390851-02	OIN MINI 4 PIN	CN8
903345-20	HEAOER ASSY 40 PIN 2.54 PITCH	CN9,13
252616-03	HEAOER ASSY 3 PIN 2 PITCH	CN17,18,26
252616-02	HEAOER ASSY 2 PIN 2 PITCH	CN19,23,24
250669-04	HEADER ASSY 4 PIN 2.5 PITCH	CN21,22
250669-02	HEAOER ASSY 2 PIN 2.5 PITCH	CN20
252616-04	HEADER ASSY 4 PIN 2 PITCH	CN27
903332-02	HEADER ASSY 2 PIN 2.54 PITCH	JP15
380333-01	JUMPER	
OSCILLATORS, TRANSISTORS AND DIODES		
325566-14	OSCILLATOR MOOULE 28.63636 MHZ	X1
252344-01	OSCILLATOR MOOULE 28.37516 MHZ	X5
325566-12	OSCILLATOR MOOULE 28.63636 MHZ	X1
902707-01	TRANSISTOR PNP 2N3906	04,6
390192-01	TRANSISTOR NPN 2N3904	01,7,9,10,12,13
252338-01	TRANSISTOR POWER 2SO789	08
390254-01	TRANSISTOR JFET MPF102	02,5
902723-02	TRANSISTOR 2SA1309A	01
902717-01	TRANSISTOR 2SA733	SUB FOR A80VE
902707-01	TRANSISTOR 2N3906	SUB FOR A80VE
900928-02	OIOOE ZENER 5.1V RO 5.1E8	04
900922-02	OIOOE ZENER 30V RD 30E8	03
900850-09	OIOOE SIGNAL 1N4448C	05
900850-01	DIODE SIGNAL 1N4148	01,6-9
252618-01	OSCILLATOR CERAMIC 3MHZ	X3
252618-02	OSCILLATOR CERAMIC 4MHZ	X4
900560-01	OSCILLATOR CRYSTAL 32.768 KHZ	X2
RESISTOR PACKS		
252657-01	S COM 82K 9 ELEMENT	RP23,24
902441-17	S COM 470 OHM 5 ELEMENT	RP13
902410-08	S COM 4.7K 9 ELEMENT	RP3,9,10,26
902441-10	S COM 120 OHM 5 ELEMENT	RP5
902410-13	S COM 10K 9 ELEMENT	RP6
902410-09	S COM 3.3K 9ELEMENT	RP11,25
252647-02	S COM 47K 3 ELEMENT	RP8
902442-55	S COM 4.7K 7 ELEMENT	RP12,14,21
902441-31	S COM 4.7K 5 ELEMENT	RP19,20,22,27,28
902422-04	INDIVIOUAL 22 OHM 4 ELEMENT	RP7
902422-06	INOIVIOUAL 68 OHM 4 ELEMENT	RP4
902422-05	INDIVIOUAL 47 OHM 4 ELEMENT	RP1,2
390227-05	INOIVIOUAL 68 OHM 5 ELEMENT	RP15-17,29,30
252648-01	INOIVIOUAL 68 OHM 3 ELEMENT	RP31
902422-09	INOIVIOUAL 1K 4 ELEMENT	RP33
252648-02	INDIVIDUAL 1K 3 ELEMENT	RP32
RESISTORS — ¼W ±5% UNLESS OTHERWISE SPECIFIEO		
390904-25	1M	RP96,115
390904-24	470K	R22,25
390904-23	100K	R51,67,68
390904-22	47K	R92
390904-20	15K	R53,60,20,30
390904-19	12K	R52,54,59,61,18,28
390904-18	10K	R4,5,12,14,16,17,23,26, 27,64,89,90,135,136,143
390904-17	4.7K	R1,39,41,45,55-57,62, 63,77,84,86,117-119, 123,125,126,134,140
390904-16	3.3K	R19,29,79,105,106
390904-14	1.5K	R66,100
390904-13	1K	R7-9,48,76,84,95,97, 128-133,137
390904-12	750 OHM	R15,24
390904-05	33 OHM	R88
390904-10	120 OHM	R46
390904-07	56 OHM	R78
390904-09	100 OHM	R50,65
390904-06	47 OHM	R36,37,98
390904-04	27 OHM	R43,44
390904-15	2.7K	R13
390904-03	22 OHM	R47

Commodore International Spare Parts List

PCB Components *(Continued)*

PCB Assembly CDTV

RESISTORS *(Continued)*		
390904-02	10 OHM	R69,70
390904-01	4.7 OHM	R2
390904-11	470 OHM	R40,42,49,83,111,112
390904-21	22K	R58,121,124,127
901600-15	47 OHM, ½W ±5%	R3,101,102
901600-52	33 OHM, ½W ±5%	R114
901550-07	100K	R82
901550-07	12K	R71
901550-20	10K	R85,103,104
901550-19	4.7K	R73-75,91,93,99,107, 108,116,141
901550-02	3.3K	R72
901550-01	1K	R138,142
901550-94	68 OHM	R80
901550-56	47 OHM	R38,109
901550-63	22 OHM	R81,87
901550-133	4.7 OHM	R6
901550-58	470 OHM	R94
901550-52	220 OHM	R21,31
901550-06	33K	R120,122
RESISTORS — ¼W 5%, CARBON		
901550-02	3.3K	R1
901550-89	150 OHM	R2
901550-105	33 OHM	R3
901550-58	470 OHM	R4
901550-56	47 OHM	R6
901550-52	220 OHM	R1,2,3
901550-76	270 OHM	R4
CAPACITORS		
390101-04	ELECT RAD 22UF 35V	C11,20,29,59,60,79,80, 177,178
900100-34	ELECT RAD 10UF 50V	C14,85,155,162,163
900100-57	ELECT RAD 3300UF 10V	C2,61,69
900100-33	ELECT RAD 47UF 16V	C82,23,164
390101-02	ELECT RAD 100UF 16V	C6,40-43,72,81,84,125, 165,173,175
900100-48	ELECT RAD 47UF 50V	C152
390101-03	ELECT RAD 470UF 16V	C54,68,77
900100-11	ELECT RAD 4.7UF 25V	C171,172,176
900022-01	MLC RAD .22UF 50V	C3,4,8,12,13,17,21,22, 58,71,73,75,78,119,140-147,184,5
900022-03	MLC RAD .1UF 50V	C157,153
900463-04	MLC AXIAL 100PF	C1,36,37,38,118
390082-05	MLC AXIAL .22UF	C5,24-28,30,35,39,64, 66,67,70,83,87,90,93-117,120-123,127,129, 130,133,137-139,148, 149,156,158,159,167, 180-183

CAPACITORS *(Continued)*		
900463-28	MLC AXIAL .01UF	C15,74,154
900019-07	MLC AXIAL .047UF	C7,16,31-34,63
900463-26	MLC AXIAL 6800PF	C10,19
900463-23	MLC AXIAL 3900PF	C9,18,56,57
900463-37	MLC AXIAL .1UF	C65,91,124,134,150,161, 179
900010-42	CER DISCS 22PF	C135
900010-64	CER DISCS 33PF	C131,132
900010-35	CER DISCS 10PF	C126,128
900010-23	CER DISCS 680PF	C86
900100-33	ELECT 47UF 16V	C1,2
900010-61	CER RAD 0.1UF 25V	C3
900463-10	MLC AXIAL 330 PF	C50,55
900463-12	MLC AXIAL 470PF	C169,170
900463-16	MLC AXIAL .001UF	C46,47,49,51
900019-17	MLC RAD 47PF 50V	C48,52
900022-05	MLC RAD .33UF 50V	C92
900100-58	ELECT RAD 470UF 10V	C76
900100-59	ELECT RAD 4.7UF 25V	C174
251029-06	TRIMMER 6.8 - 45PF	C136
MISCELLANEOUS		
312754-02	INSULATION TAPE	
905476-05	TUBING SHRINKABLE 3 X 20L	
251584-15	WRAPPING WIRE AWG 28 L = 20MM	
251842-02	EMI FILTER 100PF	EMI9-53,55-60,64,70,75-80,83-87,92-95,100
390297-02	EMI FILTER 100PF W/FERRITE	EMI1-8,71,72,81,82
903025-01	FERRITE BEAD	EMI65,66,69,74,90,91
903025-01	FERRITE BEAD	FB1,2,3
251842-02	EMI FILTER 100PF	EMI1,2,3,4
252627-01	PHOTOCOUPLER PC900V	PC1
252541-01	TACT SWITCH (USE W/252642-01) HOSHIDEN	
252644-01	TACT SWITCH (USE W/252538-01) ALPS	
252547-01	LED AMBER 1 X 5 SHARP	LED 1
252621-02	LED AMBER 5 DIA ROHM	LED 2,3
252621-01	LED AMBER 5 DIA SHARP	SUB FOR ABOVE
252548-01	HOLDER LED (USE W/252547-01)	
252542-01	WIRE FLAT JUMPER 2 MM PITCH 10 CONDUCTS L = 100	
252542-02	WIRE FLAT JUMPER 2 MM PITCH 10 CONDUCTS L = 100	SUB FOR ABOVE
251188-03	COIL INDUCTOR 100UH	L1
252599-01	SHIELD PLATE LOGIC PBC	
252601-01	INSULATION SHEET LOGIC PCB	
390879-01	STAND OFF M2.5 X 0.45 X 13 (SUB USE W/250486-01)	
906883-01	SCREW SELF TAPPING PAN HEAD M3 X 8 (QTY 4)	
906883-07	SCREW SELF TAPPING PAN HEAD M3 X 16 (QTY 4)	
318277-17	POLYFOAM BLOCK	

SECTION 5

SCHEMATICS

Schematic #252605, Rev. A

Sheet 1 of 12

SIGNAL	DESCRIPTION
28MHZ	28.63636 MHz(NTSC)/28.37516 MHz(PAL) Master Clock
7MHZ	7 MHz Processor Clock
A[23:1]	Processor Address (68000)
ACK	Data Acknowledge (Parallel)
AS	Address Strobe (68000)
AUDIN	Audio Input (RS232 jack)
AUDOUT	Audio Output (RS232 jack)
BEER	Bus Error (68000)
BG	Bus Grant (68000)
BGACK	Bus Grant Acknowledge (68000)
BLISS	Blitter Slowdown (chips)
BLIT	Chip Memory Access (chips)
BR	Bus Request (68000)
BUSY	Device Busy (parallel)
CASL/CASU	CAS lower/upper byte (DRAM)
CCK	Color Clock aka C1 (chips)
CCKQ	Color Clock Quadrature aka C3 (chips)
CDAC	7 MHz Quatrature Clock
CHNG	Media Change (floppy)
CLKRD/CLKWR	Real-time Clock Read/Write
CSYNC	Composite Sync (video)
CTS	Clear to Send (rs232)
D[15:0]	Processor Data (68000)
DIR	Direction (floppy)
DKRD	Diskette Read Data (floppy)
DKWDB	Diskette Write Data (floppy)
DKWEB	Diskette Write Enable (floppy)
DMAL	Chip DMA Request (chips)
DRA[8:0]	DRAM Address (DRAM, chips)
DRD[15:0]	DRAM Data (DRAM, chips)
DSR	Data Set Ready (rs232)
DTACK	Data Transfer Acknowledge (68000)
DTR	Data Terminal Ready (rs232)
E	Peripheral E Clock (68000)
EXRAM	Expansion Memory Present
FC[0:0]	Function Control (68000)
FIRE0/FIRE1	Fire Button (joysticks)
HLT	Processor Halt (68000)
HSYNC	Horizontal Sync (video)
INDEX	Diskette Index Hole (floppy)
INT[2,3,6]	Interrput Requests (chips)
IORESET	I/O Reset
IPL[2:0]	Processor Interrupt Requests (68000)
KBCLOCK	Keyboard Clock (keyboard)
KBDATA	Keyboard Data (keyboard)
KBRESET	Keyboard Reset (keyboard)
LDS/UDS	Upper/Lower Data Strobe (68000)
LED	Power On LED

SIGNAL	DESCRIPTION
LEFT/RIGHT	Audio Channel
MTR	Motor On (flo
MTR0	Motor On Drive
M0V/M0H	Mouse Quadrat
M1V/M1H	Mouse Quadrat
OVL	Overlay ROM o
OVR	Override Syst
PIXELSW	Pixel Switch
POT0X/POT0Y	Pot Lines (jo
POT1X/POT1Y	Pot Lines (jo
POUT	Paper Out (pa
PPD[7:0]	Parallel Port
RAMEN	RAM Enable (c
REGEN	Chip Register
RAS0/RAS1	RAS Internal/
RDY	Drive Ready (
RESET	General Reset
RGA[8:1]	Register Addr
RI	Ring Indicate
ROMEN	ROM Enable
RTS	Request to Se
RST	Processor Res
RXD	Receive Data
RW	Processor Rea
SEL	Select (paral
SEL[3:0]	Drive Select
SIDE	Side Select (
STEP	Head Step Com
TRK0	Track 0 Sense
TXD	Transmit Data
VMA	Valid Memory
VPA	Valid Periphe
VSYNC	Vertic1 Sync
WE	Write Enable
WPROT	Write Protect
XCLK	External 28 M
XCLKEN	External Cloc
XRDY	External Data
AUDL/AUDR	Amiga Audio Le
AEMP	Audio Deemphas
AUPLY	CD Audio Play
BAS	Buffered Addre
BCLK	CD Audio Clock
BCSMCEN/BCSMCOD	Buffered Chip
BRW	Buffered Proce
BSEN	Logic Voltage
BTXD	Buffer Transmi
BLDS/BUDS	Buffered Upper

py)
(floppy)
re Signals (joysticks)
re Signals (joysticks)
er RAM
m Decodeing
video)
sticks)
sticks)
allel)
Data (parallel)
ips)
Enable (chips)
xpansion Lines (DRAM)
loppy)
ss Bus (chips)
(rs232)
d (rs232)
t (68000)
RS232)
/Write (68000)
el)
floppy)
loppy)
and (floppy)
(floppy)
(RS232)
ddress (68000)
al Address (68000)
video)
DRAM)
Sense (floppy)
z Clock (genlock)
Enable (genlock)
Ready
ft/Right
ls
ss Strobe
Select Memory Card Even/Odd
ssor Read/Write
Sense
: Data (Midi)
/Lower Data Strobe

SIGNAL	DESCRIPTION
C16M	16MHz Dac Clock
CDAL/CDAR	CD Audio Left/Right
CD/TV	Select CD/TV (see INCD)
CONFIGIN	Config In
CONFIGOUT	Config Out
CSCD	Chip Select CDROM Driver
CSEN/CSOD	Chip Select CDROM Driver Even/Odd
CSMC	Chip Select Memory Card
CSMCEN/CSMCOD	Chip Select Memory Card Even/Odd
CSNV	Non-Volatile Memory Select
CSRC	Real Time Chip Select
CSX0	XT Device Chip Select No.0
DACATT	Attinator Data (Dac)
DACLCH	Attinator Latch (Dac)
DACST	Attinator Strobe (Dac)
DATA	CD Audio Data
DMCD	Dmac Dma Data
EOP.CSX1	End of Process/XT Device Chip Select No.1
GMS[1:0]	Genlock Mode Select (Remote Control)
IFRST	Interface Reset
INAC	Indicator Power/Status
INCD	Indicator CD/TV Mode
INTD	CD Drive Reset
INTS	SCSI Interrupt
IOR/IOW	Dmac Read/Write
KBSE	Keyboard Sense
LMUTE	Line Mute
LRCLK	Audio Left/Right Clock
MPS	Power Sense (Logic)
MS[1:0]	Genlock Mode Select (Amiga)
MUTE	CD Mute
POWER	Main Logic Power On/Off
SD[7:0]	Dmac XT/SCSI Data
VCK	Attinator Data Clock (Head Phone)
VDATA	Attinator Data Clock (Head Phone)
VF[2:1]	Filament Voltage
VST	Attinator Data Clock (Head Phone)
VPP	-30V Voltage
XA,YA,XB,YB[2:1]	Mouse Input Signal
XDACK	XT Device Data Acknowledge
XDREQ	XT Device Data Requirement
EMC	*ENABLE MEMORY CARD*
ECD	*ENABLE CDROM DRIVER (ROM)*
WEPROM	*WRITE ENABLE E² PROM*

Schematic #252605, Rev. A

Sheet 2 of 12

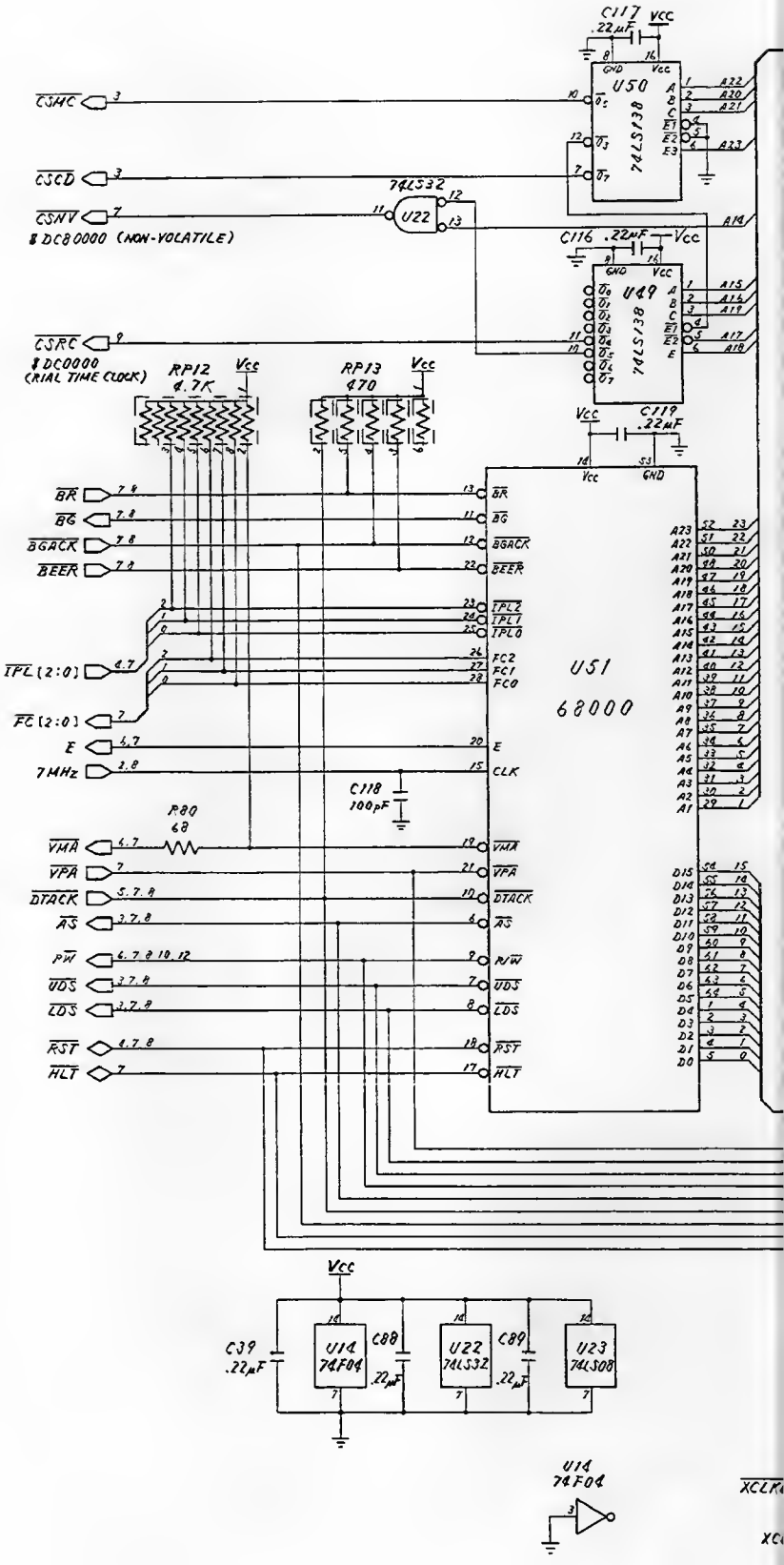

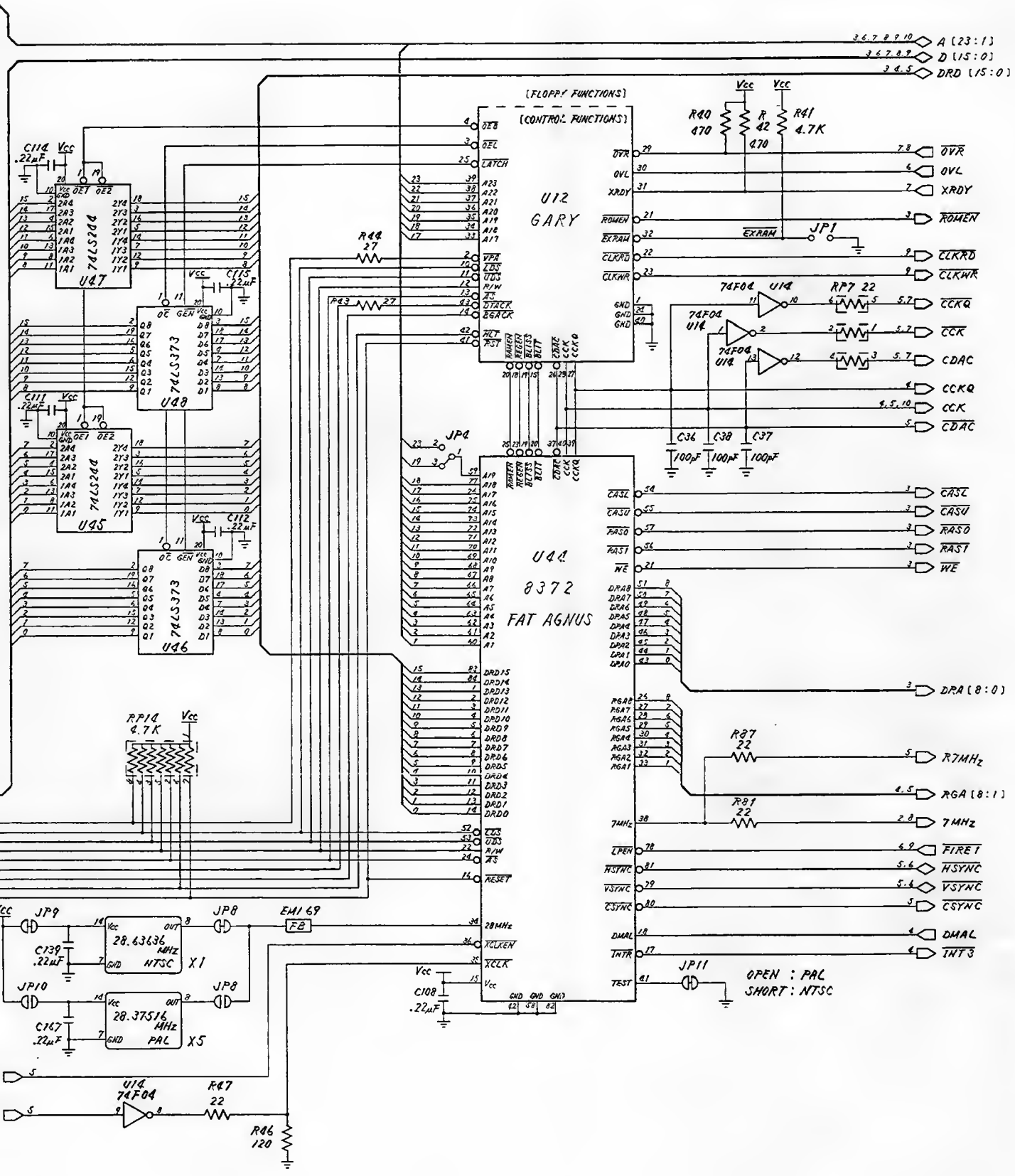
A [23:1]
D [15:0]
DRD [15:0]
[FLOPPY FUNCTIONS]
[CONTROL FUNCTIONS]
U12
GARY
U44
8372
FAT AGNUS
74LS244
U47
74LS373
U48
U45
U46
74F04
U14
RP7 22
RP14
4.7K
R40
470
R42
470
R41
4.7K
R44
27
R43
27
R87
22
R81
22
R47
22
R46
120
C36
C38
C37
100pF
C114
.22µF
C115
.22µF
C111
.22µF
C112
.22µF
C139
.22µF
C167
.22µF
C108
.22µF
JP1
JP4
JP8
JP9
JP10
JP11
EM1 69
FB
28.63636
MHz
NTSC
X1
28.37516
MHz
PAL
X5
OVR
OVL
XRDY
ROMEN
CLKRD
CLKWR
CCKQ
CCK
CDAC
CASL
CASU
RAS0
RAS1
WE
DRA [8:0]
RGA [8:1]
7MHz
FIRE1
HSYNC
VSYNC
CSYNC
DMAL
INT3
OPEN : PAL
SHORT : NTSC

Schematic #252605, Rev. A

Sheet 3 of 12

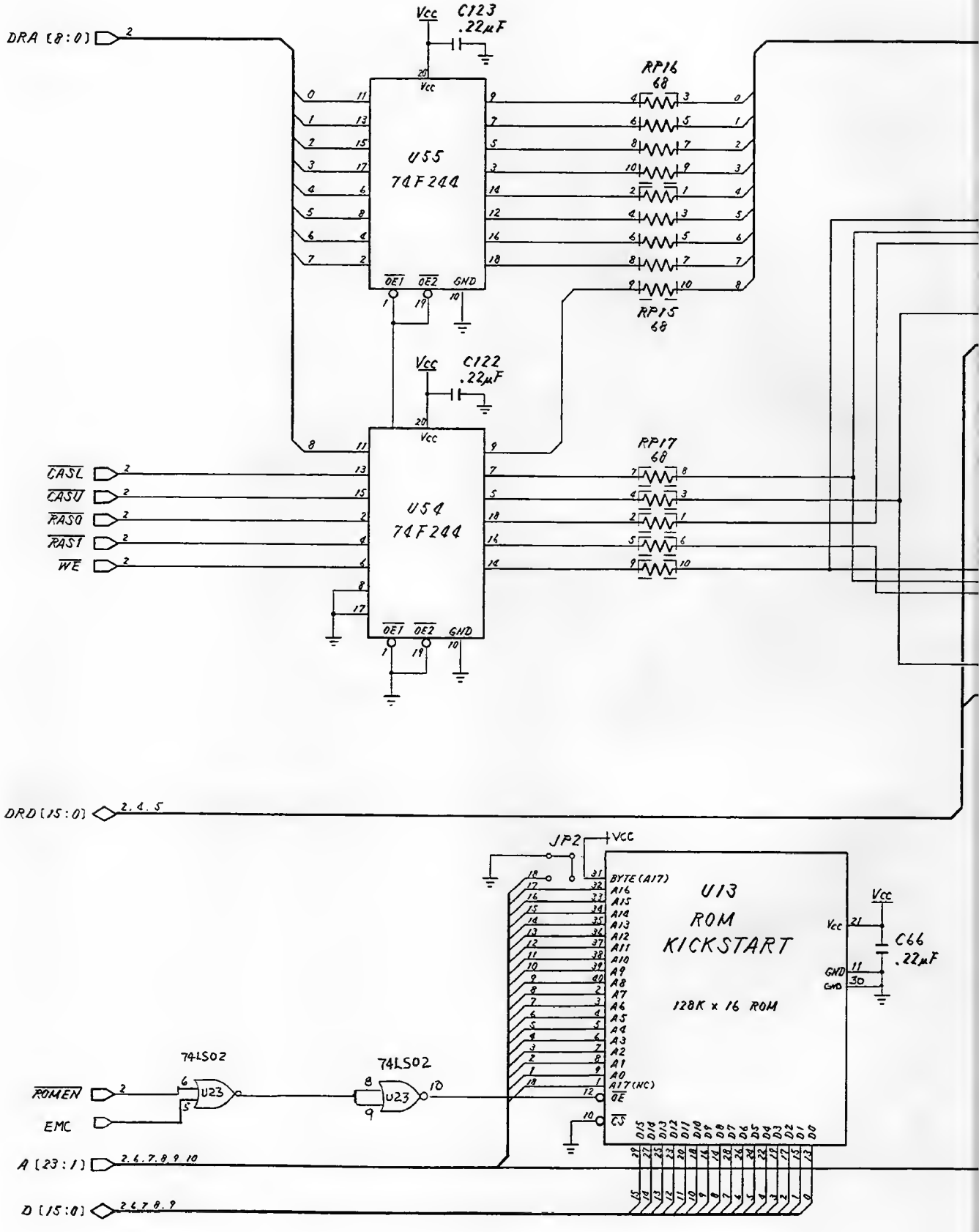

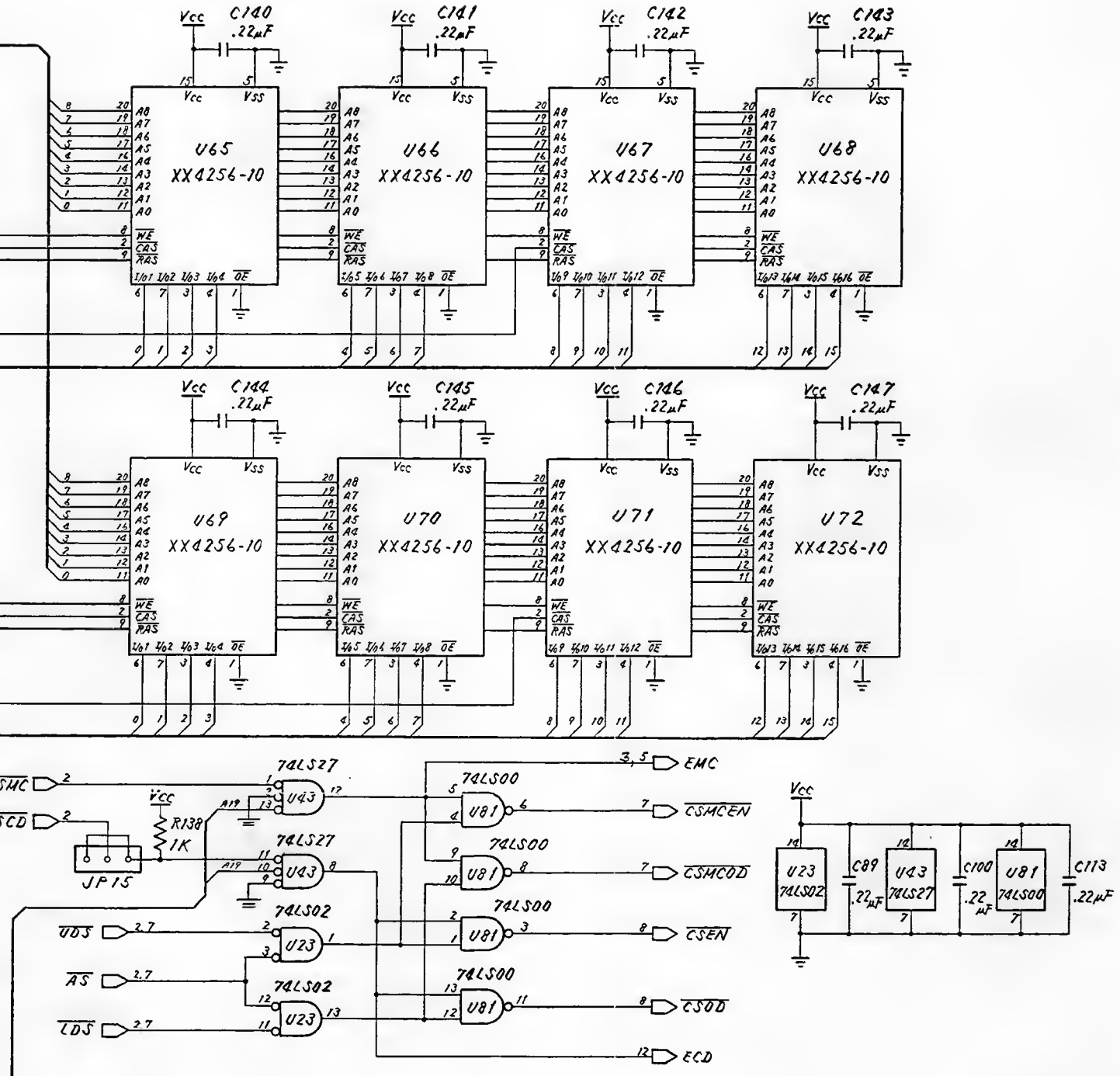
Vcc
C140 .22µF
C141 .22µF
C142 .22µF
C143 .22µF
C144 .22µF
C145 .22µF
C146 .22µF
C147 .22µF
U65 XX4256-10
U66 XX4256-10
U67 XX4256-10
U68 XX4256-10
U69 XX4256-10
U70 XX4256-10
U71 XX4256-10
U72 XX4256-10
A0 A1 A2 A3 A4 A5 A6 A7 A8
WE CAS RAS OE
Vcc Vss

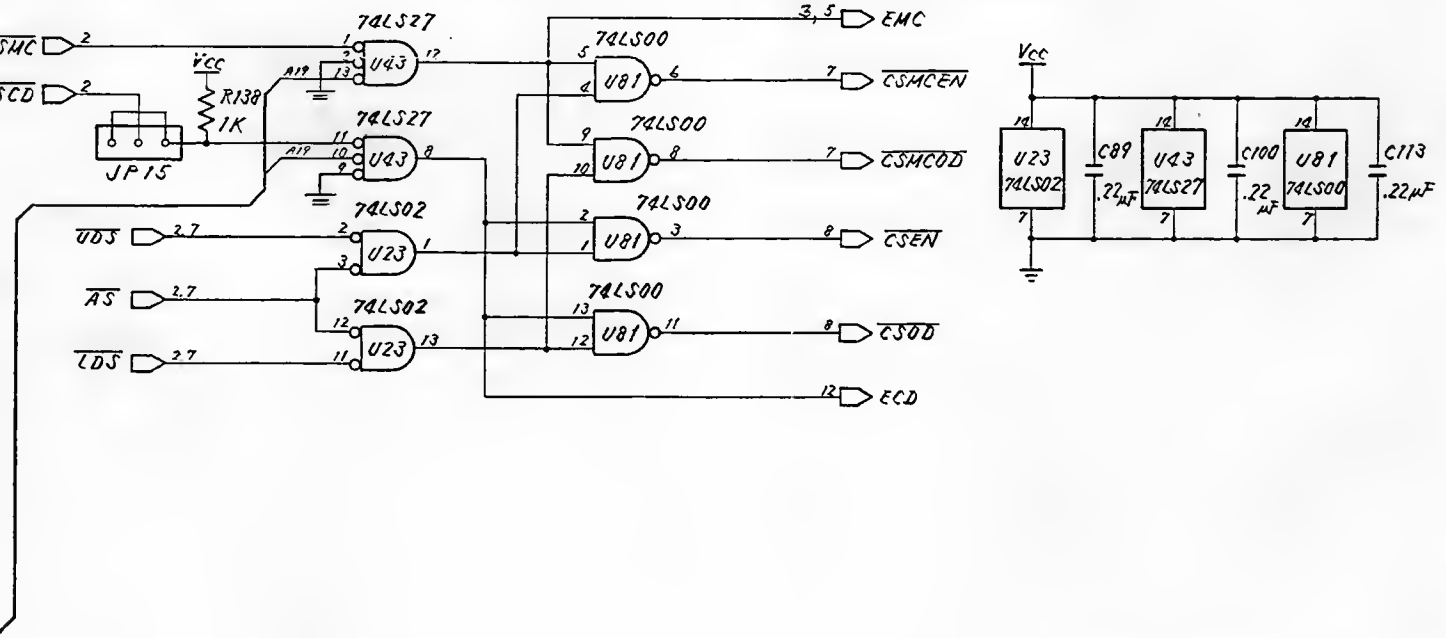
74LS27
74LS00
74LS02
U43
U81
U23
R138 1K
JP15
VCC
UDS
AS
LDS
EMC
CSMCEN
CSMCOD
CSEN
CSOD
ECD
U23 74LS02
C89 .22µF
U43 74LS27
C100 .22µF
U81 74LS00
C113 .22µF

Schematic #252605, Rev. A

Sheet 4 of 12

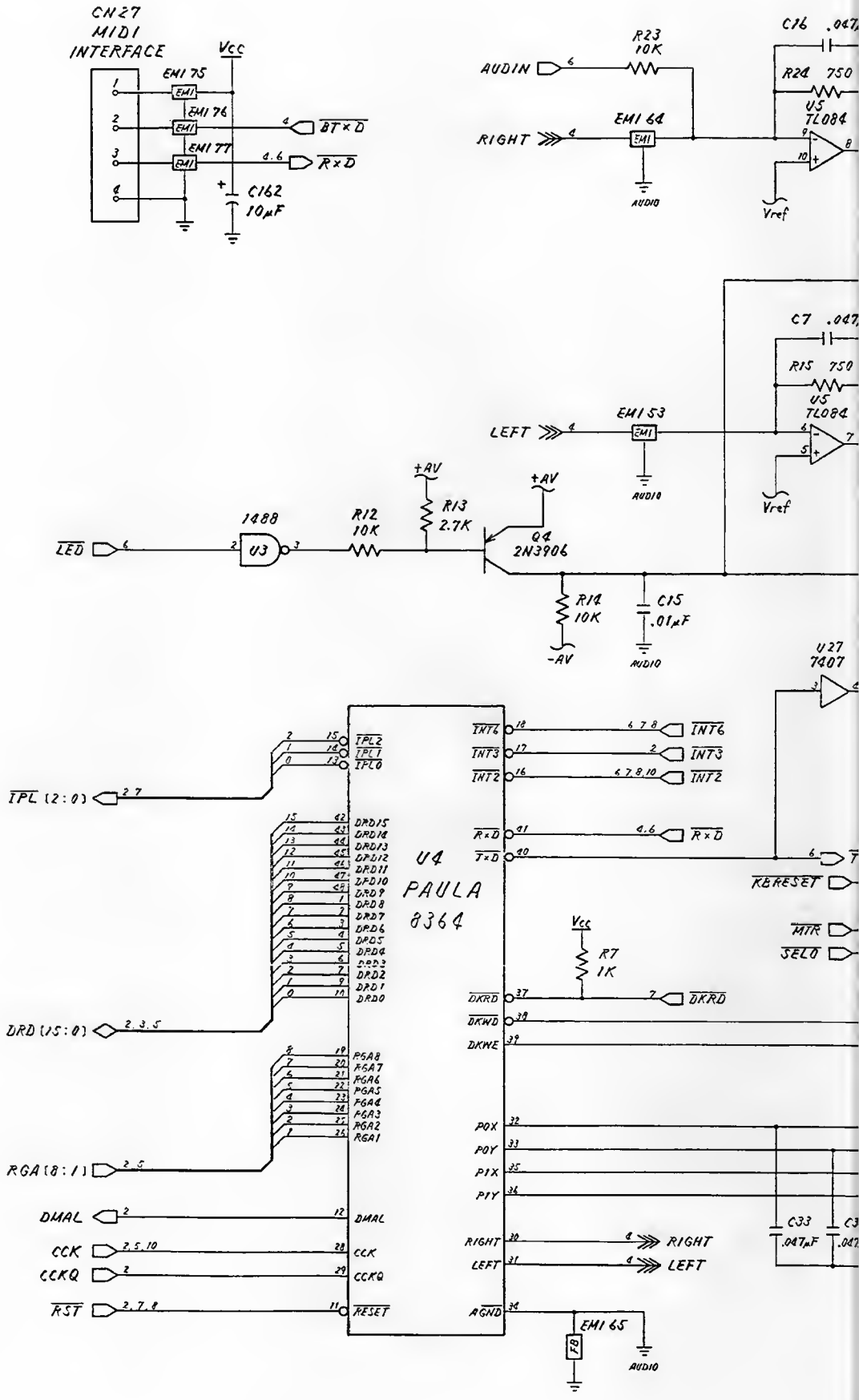

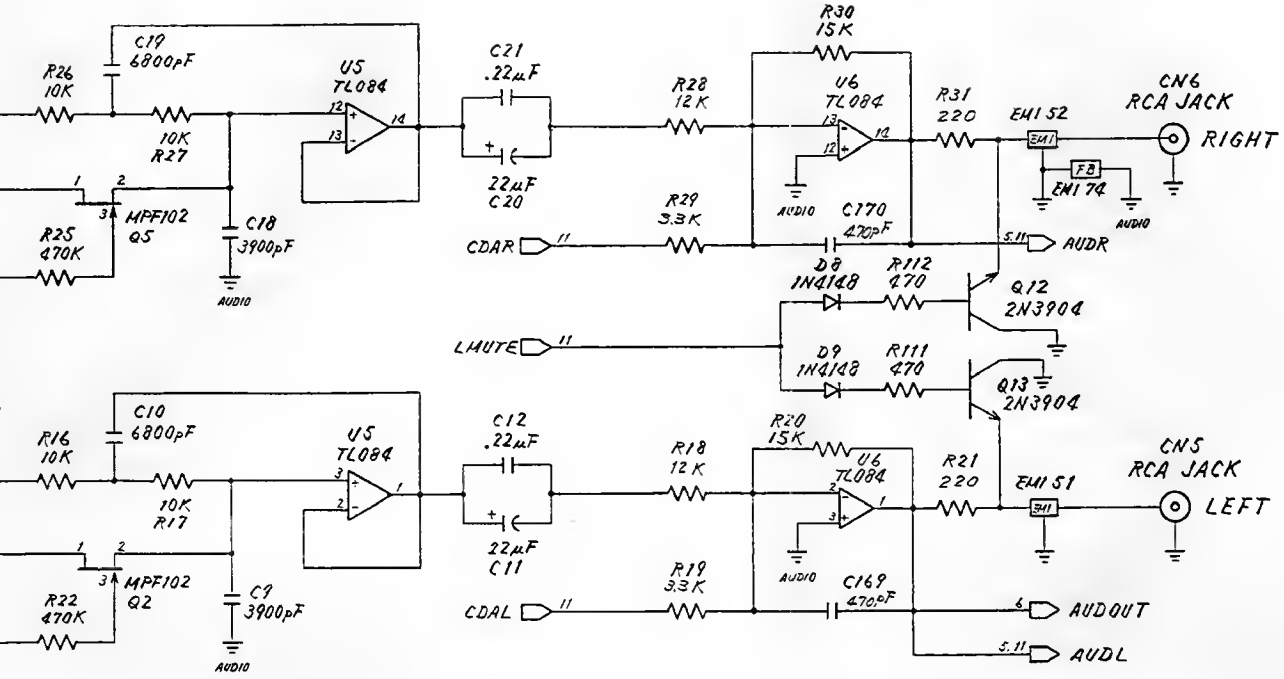
C19 6800pF
R26 10K
U5 TL084
10K R27
C21 .22µF
22µF C20
R28 12K
R30 15K
U6 TL084
R31 220
EMI52
CN6 RCA JACK
RIGHT
FB EMI74
AUDIO
R29 3.3K
C170 470pF
CDAR
AUDR
MPF102 Q5
C18 3900pF
R25 470K
D8 IN4148
R112 470
Q12 2N3904
LMUTE
D9 IN4148
R111 470
Q13 2N3904
C10 6800pF
R16 10K
U5 TL084
10K R17
C12 .22µF
22µF C11
R18 12K
R20 15K
U6 TL084
R21 220
EMI51
CN5 RCA JACK
LEFT
MPF102 Q2
C9 3900pF
R22 470K
R19 3.3K
C169 470pF
CDAL
AUDOUT
AUDL

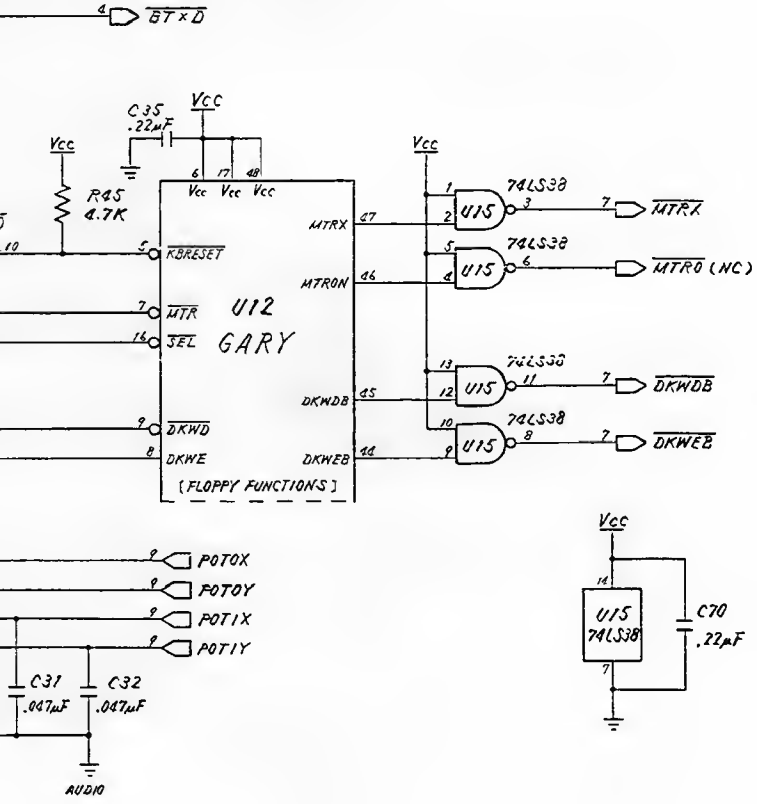
BTxD
C35 .22µF
Vcc
R45 4.7K
KBRESET
MTR
SEL
U12
GARY
DKWD
DKWE
MTRX
MTRON
DKWDB
DKWEB
[FLOPPY FUNCTIONS]
74LS38
U15
MTRX
MTRO (NC)
DKWDB
DKWEE
POTOX
POTOY
POTIX
POTIY
C31 .047µF
C32 .047µF
AUDIO
C70 .22µF

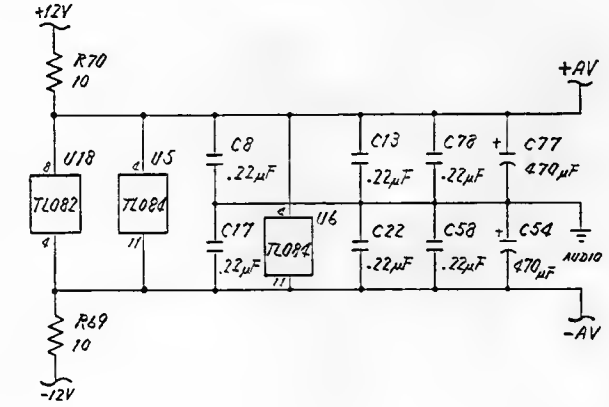
+12V
R70 10
+AV
U18
TL082
U5
TL084
C8 .22µF
C13 .22µF
C78 .22µF
C77 470µF
C17 .22µF
U16
TL084
C22 .22µF
C58 .22µF
C54 470µF
AUDIO
R69 10
-12V
-AV

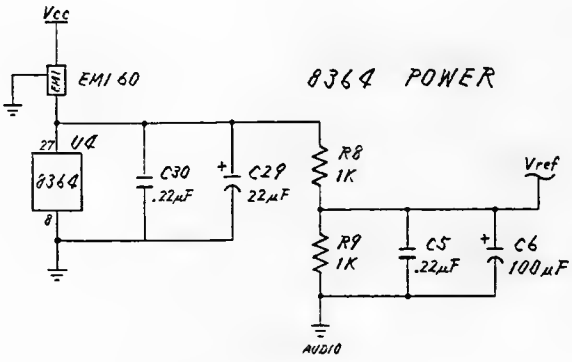
Vcc
EMI60
8364 POWER
U4
8364
C30 .22µF
C29 22µF
R8 1K
Vref
R9 1K
C5 .22µF
C6 100µF
AUDIO

Schematic #252605, Rev. A

Sheet 5 of 12

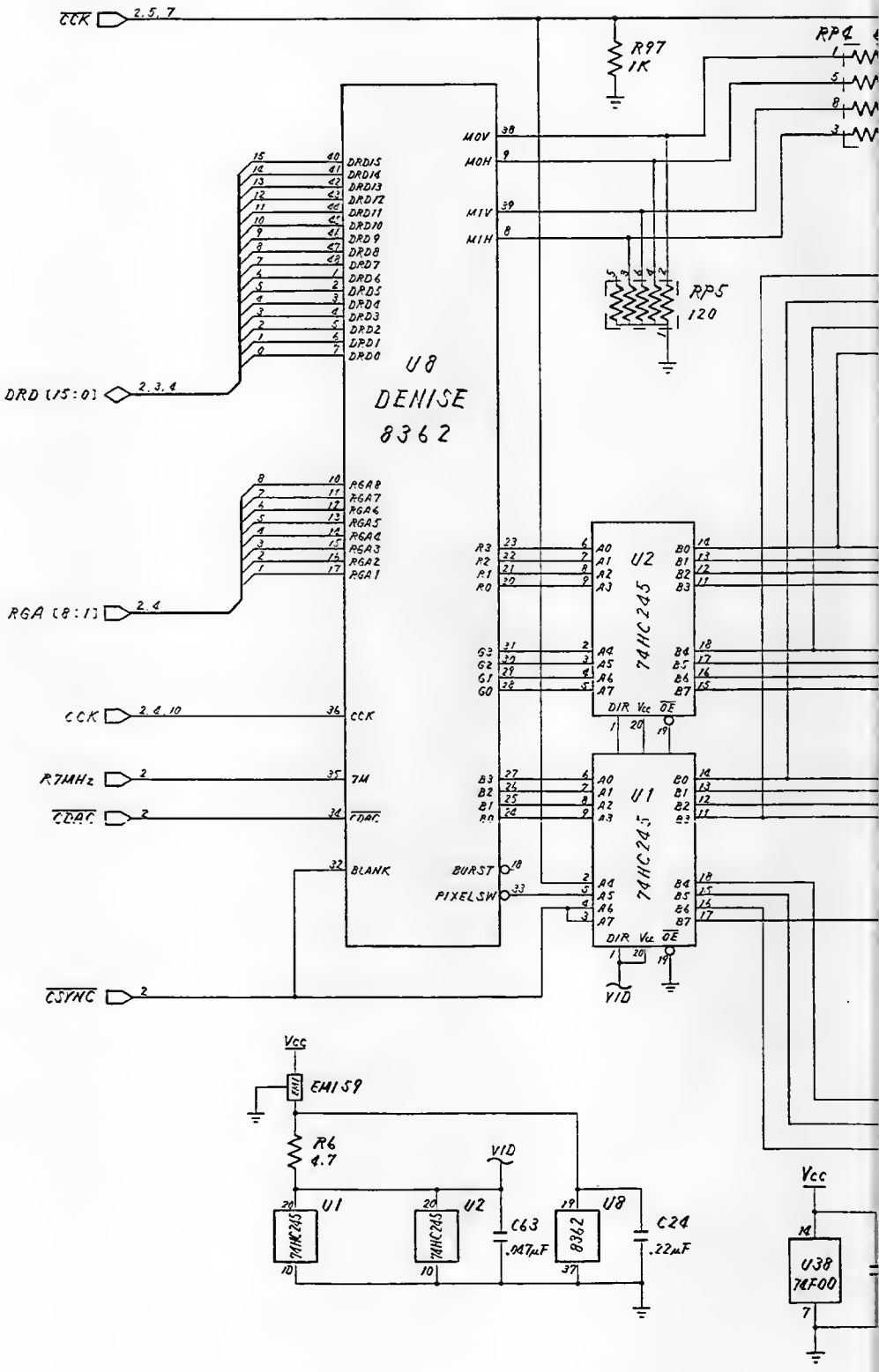

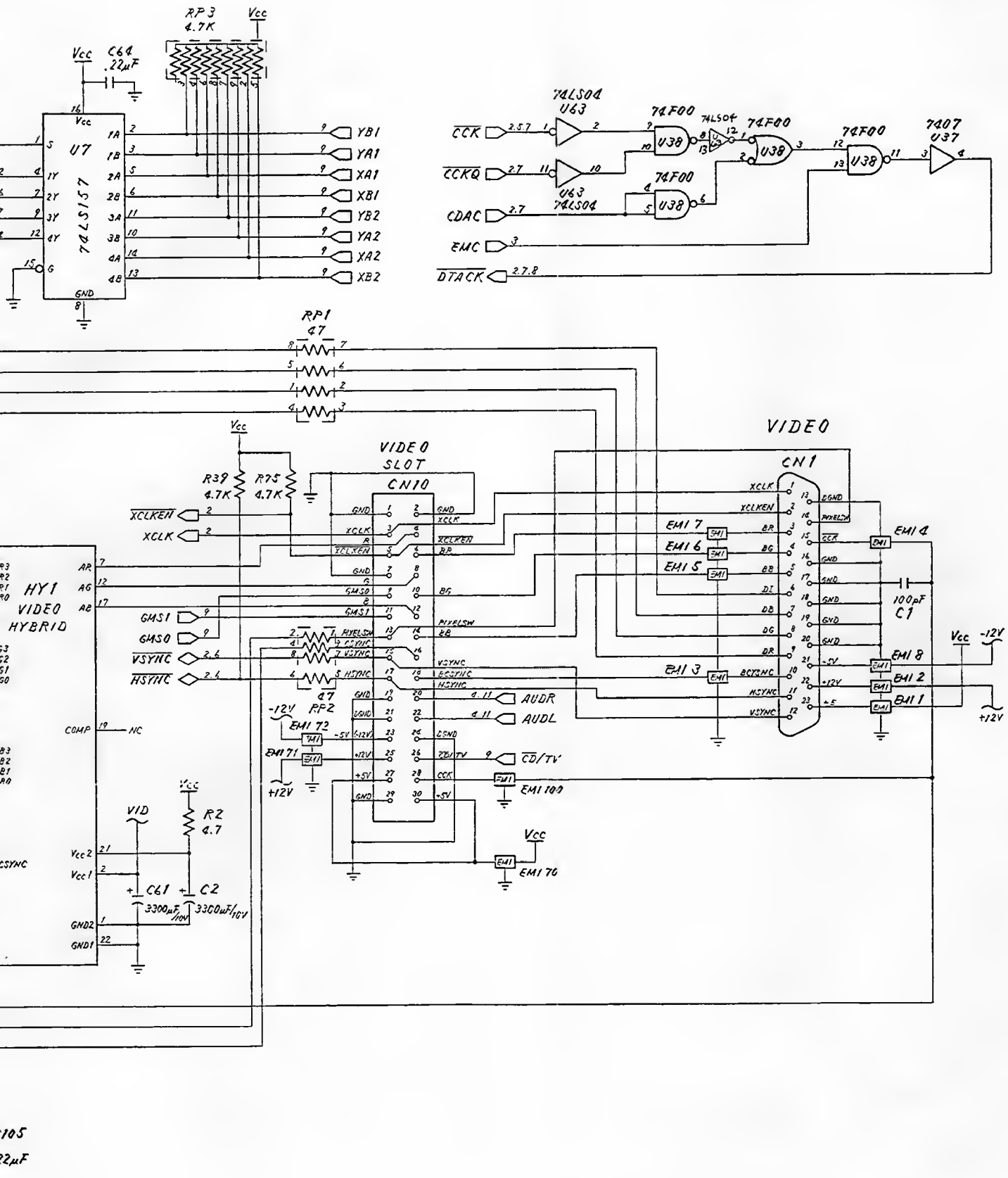
RP3
4.7K
Vcc
C64
.22µF
U7
74LS157
YB1
YA1
XA1
XB1
YB2
YA2
XA2
XB2
74LS04
U63
74F00
U38
74LS04
74F00
74F00
7407
U37
CCK
CCKQ
CDAC
EMC
DTACK
RP1
47
VIDEO
SLOT
CN10
R39
4.7K
R75
4.7K
XCLKEN
XCLK
HY1
VIDEO
HYBRID
GMS1
GMS0
VSYNC
HSYNC
47
RP2
-12V
EM1 72
EM1 71
+12V
AUDR
AUDL
CD/TV
EM1 100
EM1 70
VIDEO
CN1
EM1 7
EM1 6
EM1 5
EM1 3
EM1 4
100pF
C1
EM1 8
EM1 2
EM1 1
-12V
+12V
VID
R2
4.7
C61
3300µF/10V
C2
3300µF/10V
105
22µF

Schematic #252605, Rev. A

Sheet 6 of 12

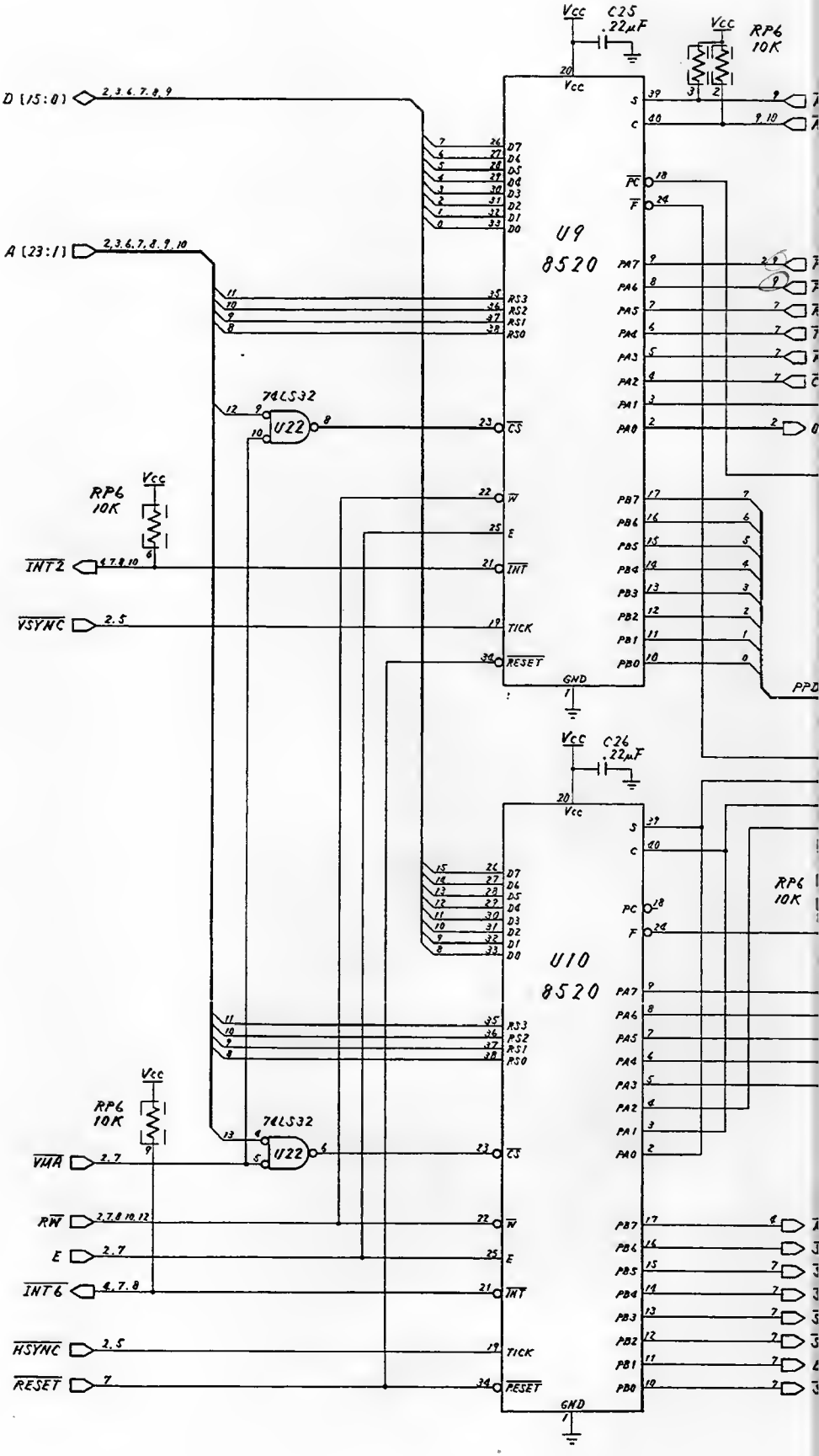

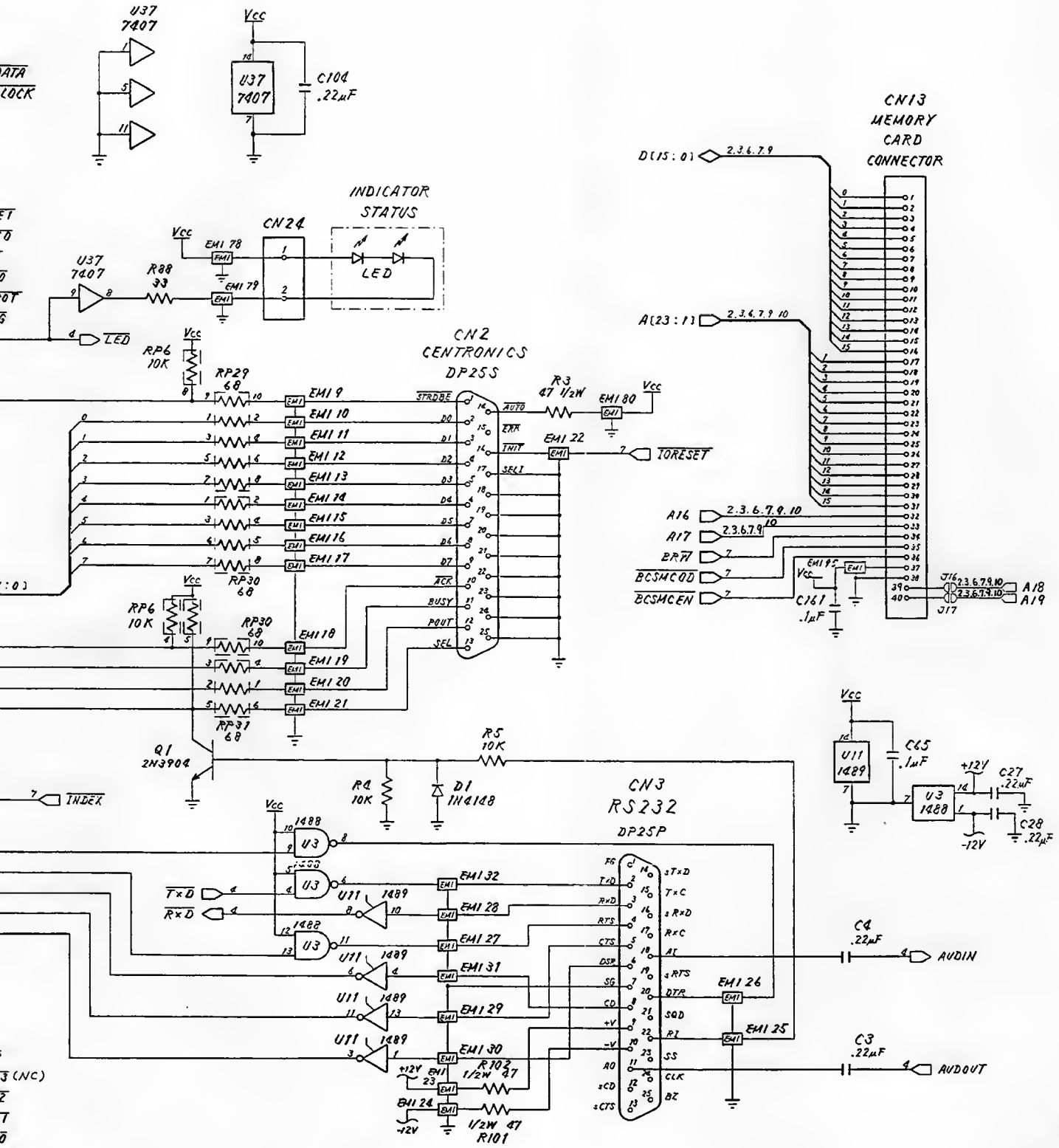
U37
7407
Vcc
C104
.22µF
CN13
MEMORY
CARD
CONNECTOR
D[15:0]
A[23:1]
INDICATOR
STATUS
CN24
LED
R88
33
RP6
10K
RP29
68
RP30
68
RP31
68
CN2
CENTRONICS
DP25S
STROBE
AUTO
ERR
INIT
SELI
ACK
BUSY
POUT
SEL
R3
47 1/2W
TORESET
A16
A17
BRW
BCSMCOD
BCSMCEN
C161
.1µF
A18
A19
Q1
2N3904
R5
10K
R4
10K
D1
IN4148
INDEX
CN3
RS232
DP25P
TxD
RxD
AUDIN
AUDOUT
C4
.22µF
C3
.22µF
C65
.1µF
C27
.22µF
C28
.22µF
+12V
-12V
R102
1/2W 47
R101
1/2W 47

Schematic #252605, Rev. A

Sheet 7 of 12

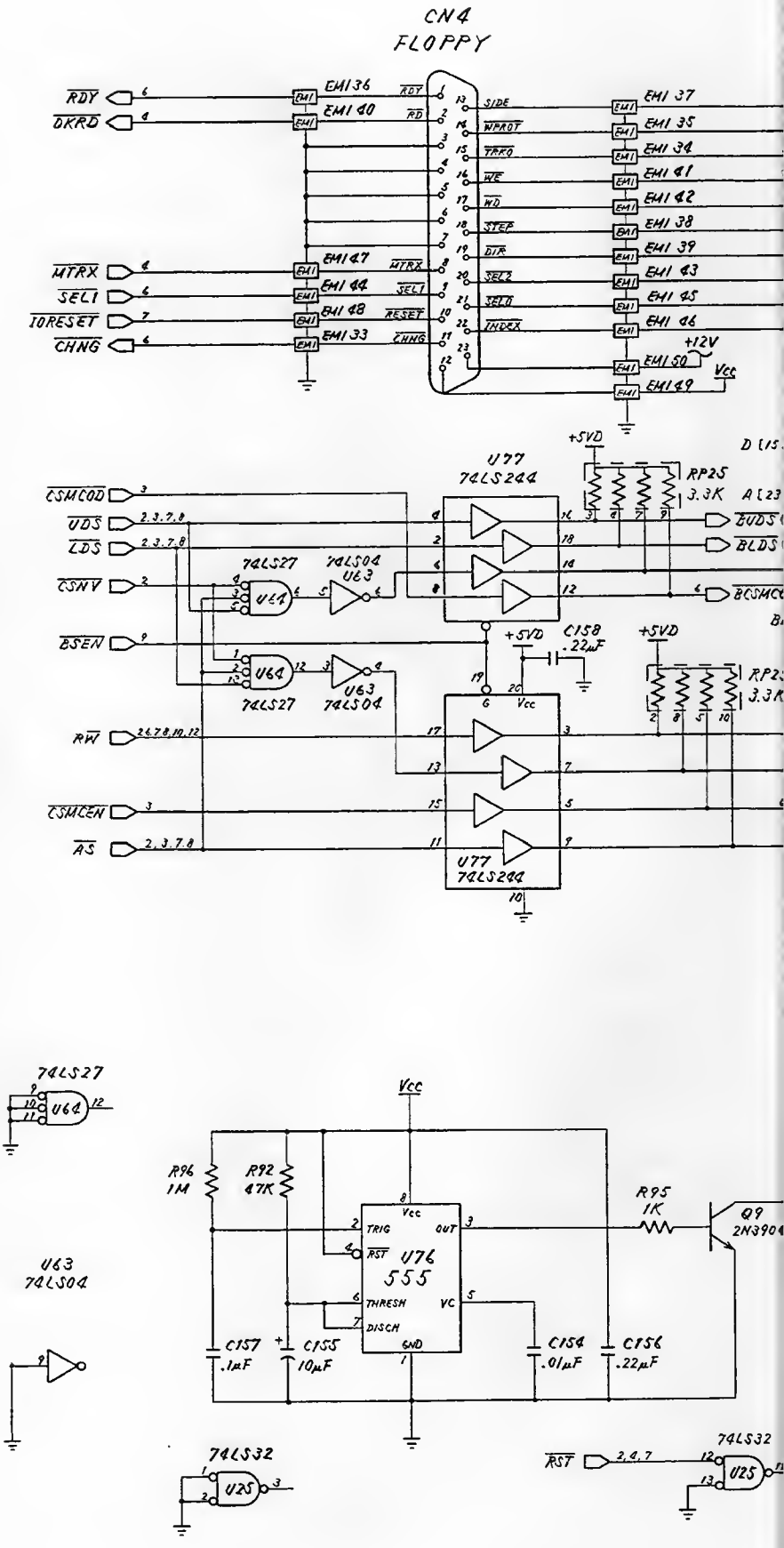

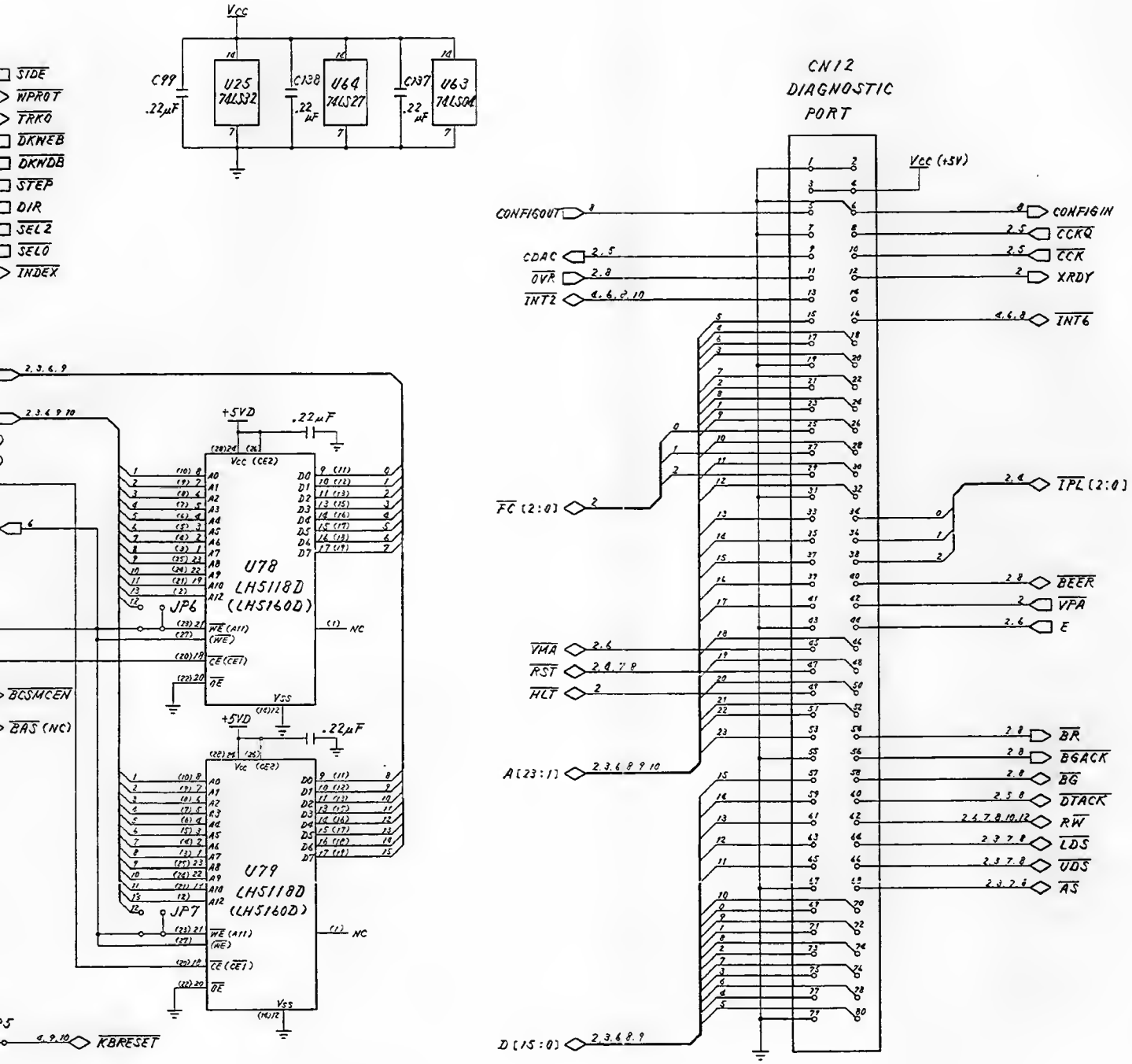
Vcc
C99 .22µF
U25 74LS32
C138 .22µF
U64 74LS27
C137 .22µF
U63 74LS04
SIDE
WPROT
TRK0
DKWEB
DKWDB
STEP
DIR
SEL2
SEL0
INDEX
CN12 DIAGNOSTIC PORT
Vcc (+5V)
CONFIGOUT
CONFIGIN
CCKQ
CCK
XRDY
CDAC
OVR
INT2
INT6
IPL (2:0)
FC (2:0)
BEER
VPA
E
VMA
RST
HLT
BR
BGACK
BG
DTACK
RW
LDS
UDS
AS
A (23:1)
D (15:0)
+5VD
.22µF
U78 LH5118D (LH5160D)
U79 LH5118D (LH5160D)
JP6
JP7
BCSMCEN
BAS (NC)
KBRESET
74LS32
U25
IORESET
RESET

Schematic #252605, Rev. A

Sheet 8 of 12

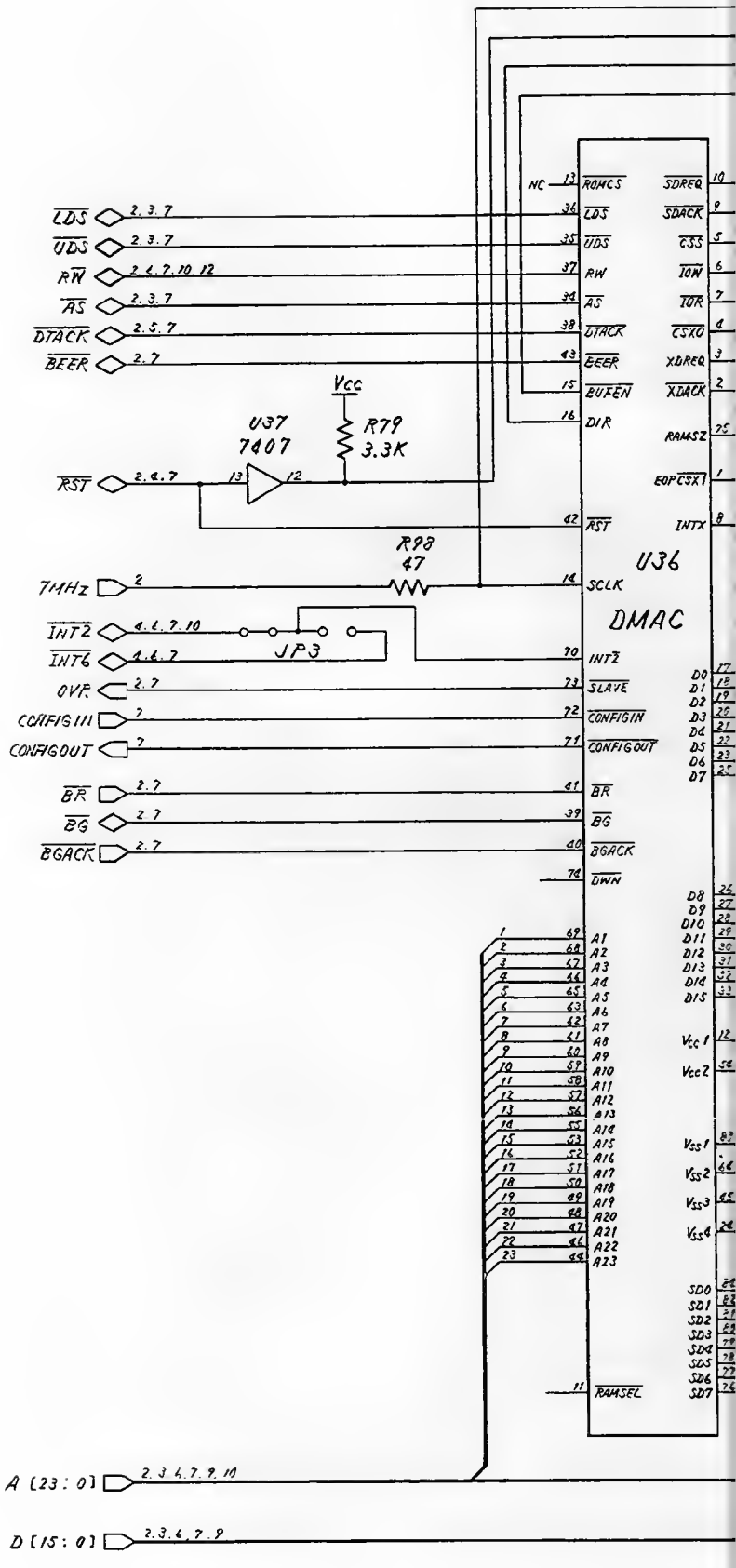

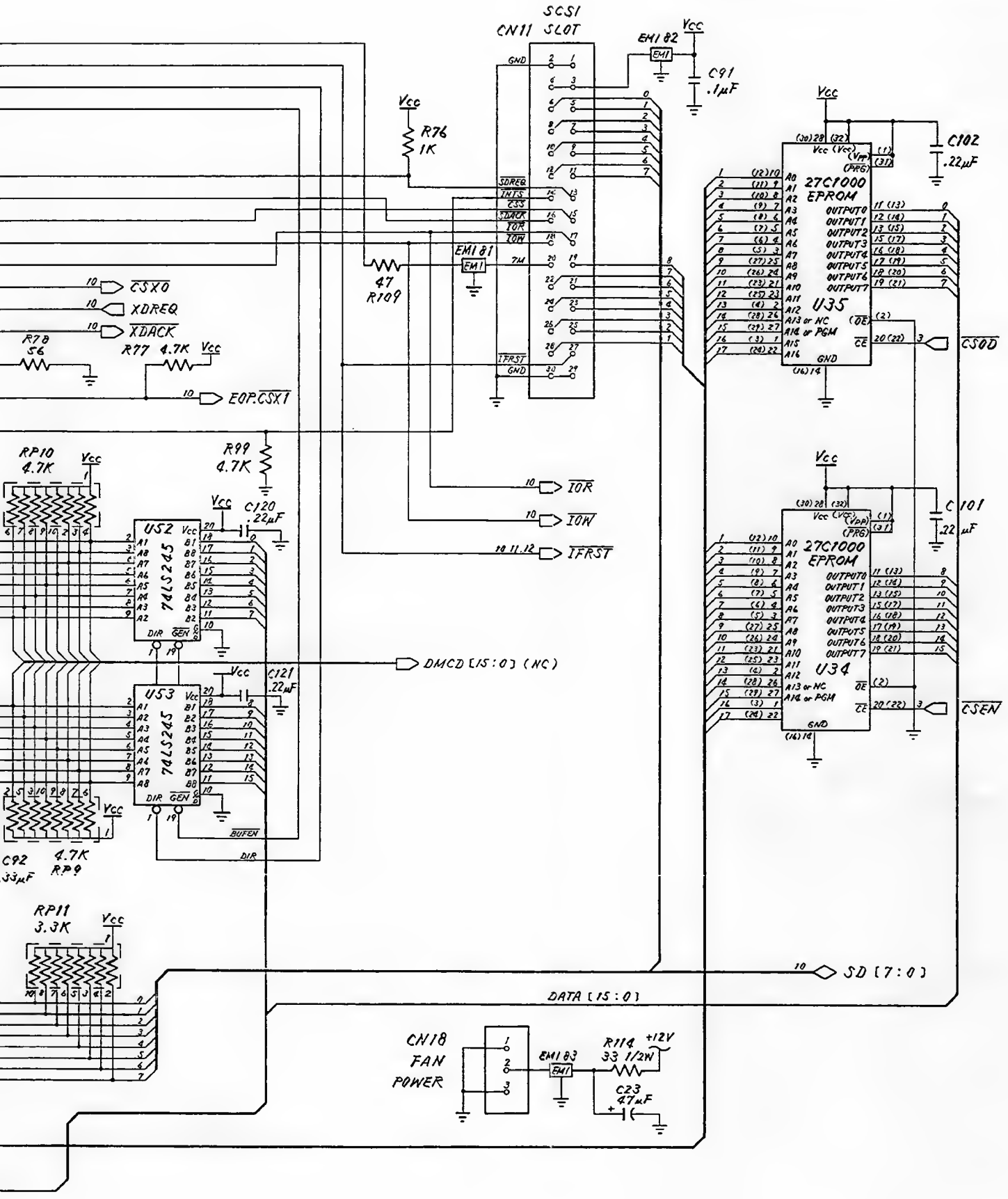
SCSI
CN11 SLOT
GND
SDREQ
INTS
CSS
SDACK
IOR
IOW
IFRST
EM181
EM182
EM183
Vcc
R76
1K
R109
47
C91
.1µF
C102
.22µF
C101
.22 µF
C120
22µF
C121
.22µF
C92
.33µF
R77 4.7K
R78
56
R99
4.7K
RP10
4.7K
RP9
4.7K
RP11
3.3K
27C1000
EPROM
U35
U34
U52
U53
74LS245
DIR
GEN
BUFEN
CSXO
XDREQ
XDACK
EOP.CSX1
IOR
IOW
IFRST
DMCD [15:0] (NC)
SD [7:0]
DATA [15:0]
CSOD
CSEN
CN18
FAN
POWER
R114
33 1/2W
+12V
C23
47µF

Schematic #252605, Rev. A

Sheet 9 of 12

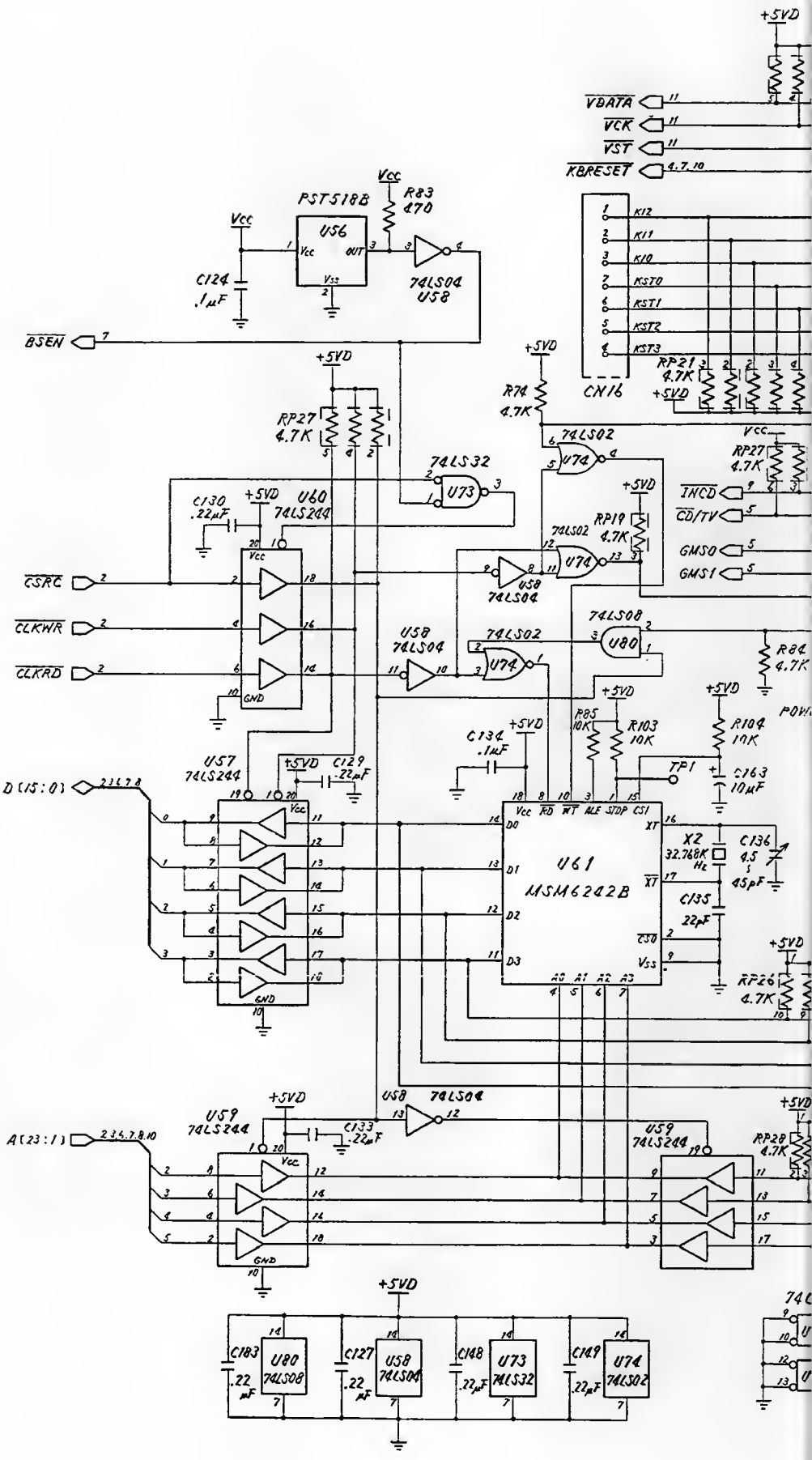

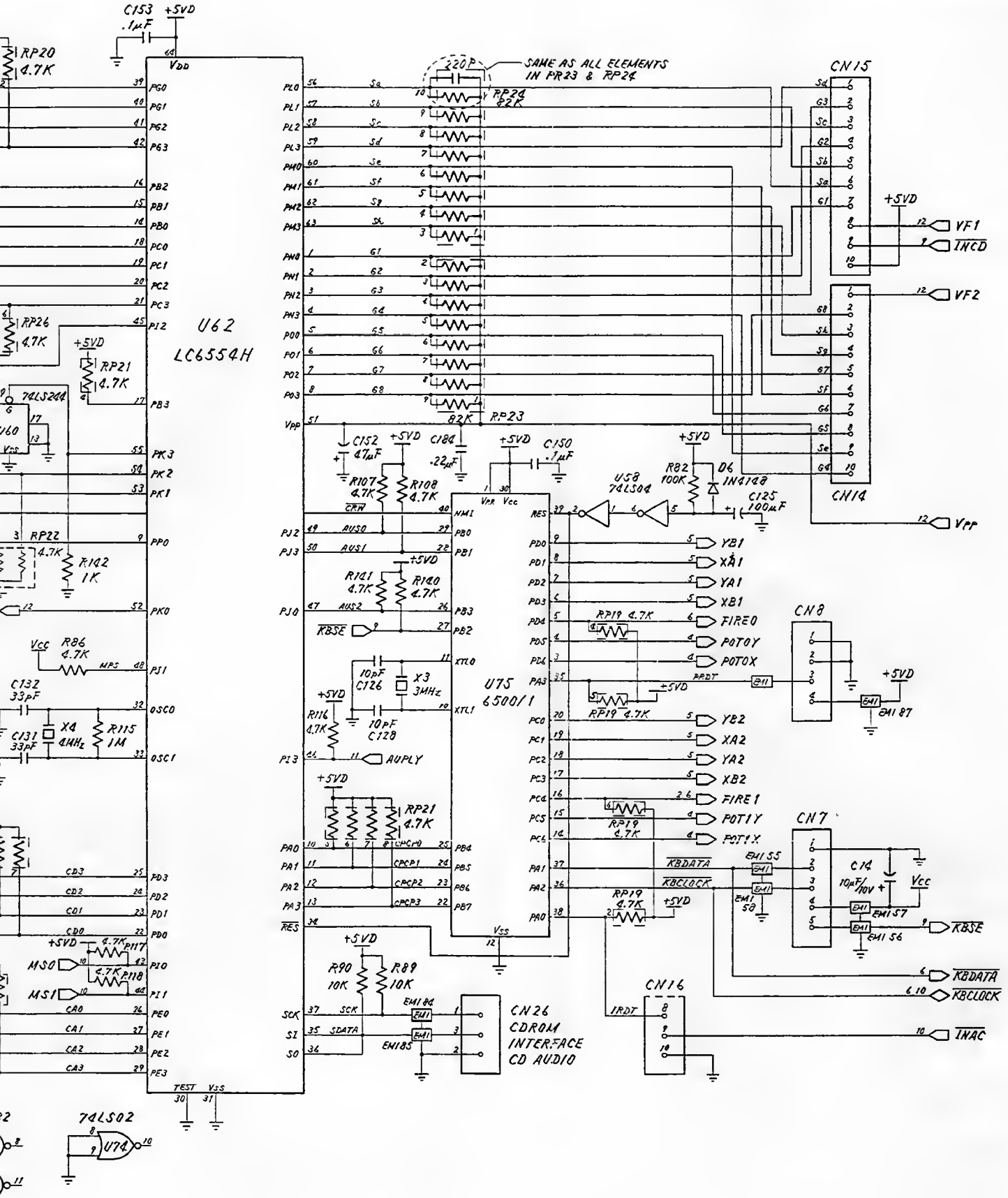
U62
LC6554H
U75
6500/1
U58
74LS04
CN15
CN14
CN8
CN7
CN16
CN26
CDROM
INTERFACE
CD AUDIO
SAME AS ALL ELEMENTS
IN PR23 & RP24
74LS244
74LS02
VF1
INCD
VF2
VPP
KBSE
KBDATA
KBCLOCK
INAC
AUPLY
YB1
XA1
YA1
XB1
FIRE0
POT0Y
POT0X
YB2
XA2
YA2
XB2
FIRE1
POT1Y
POT1X
MS0
MS1

Schematic #252605, Rev. A

Sheet 10 of 12

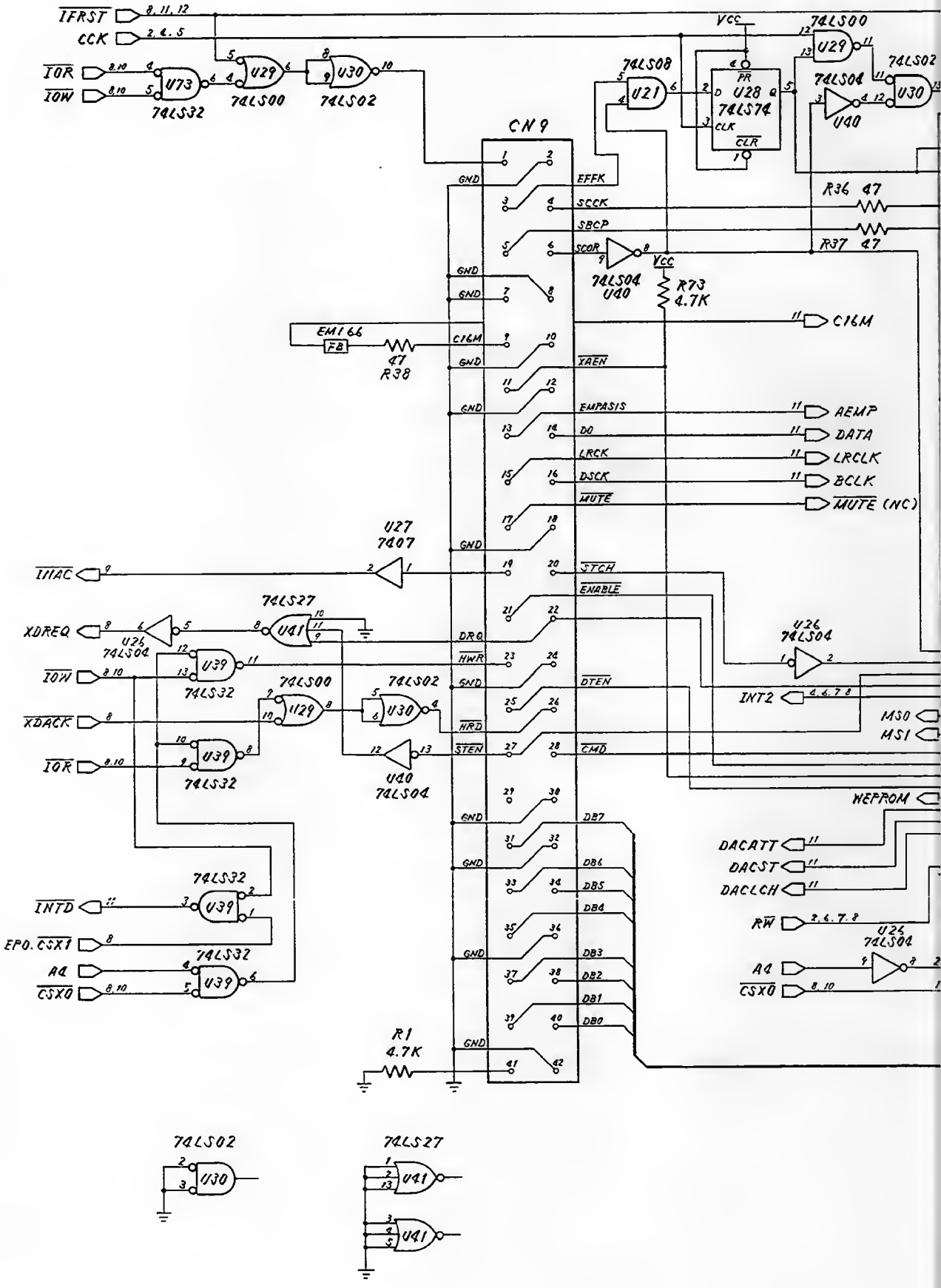

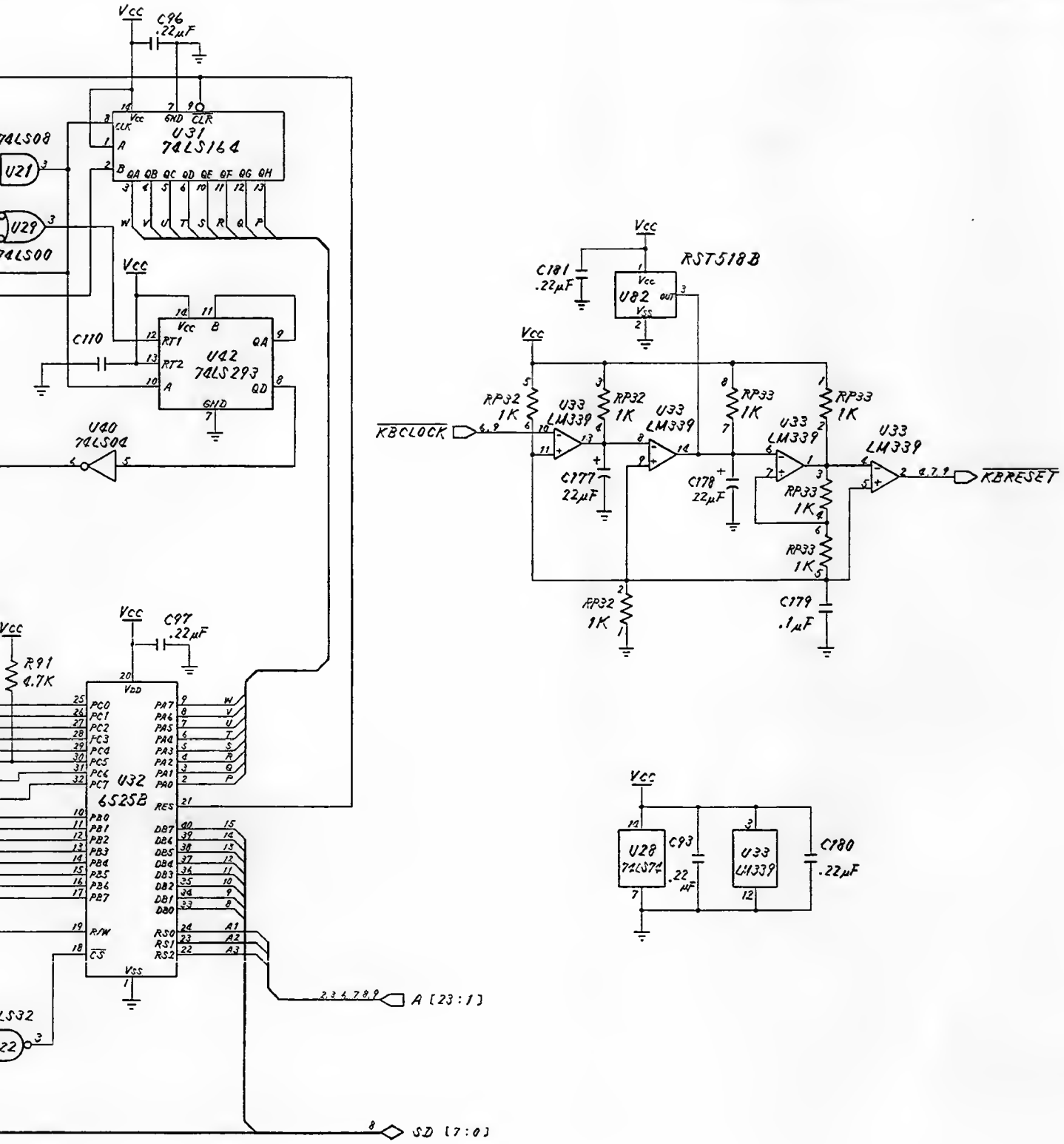
Vcc
C96 .22µF
U31 74LS164
74LS08
U21
U29
74LS00
C110
U42 74LS293
U40 74LS04
C97 .22µF
R91 4.7K
U32 6525B
R/W
CS
A [23:1]
SD [7:0]
RST518B
C181 .22µF
U82
KBCLOCK
RP32 1K
U33 LM339
C177 22µF
C178 22µF
RP33 1K
C179 .1µF
KBRESET
U28 74LS74
C93 .22 µF
C180 .22µF

Schematic #252605, Rev. A

Sheet 11 of 12

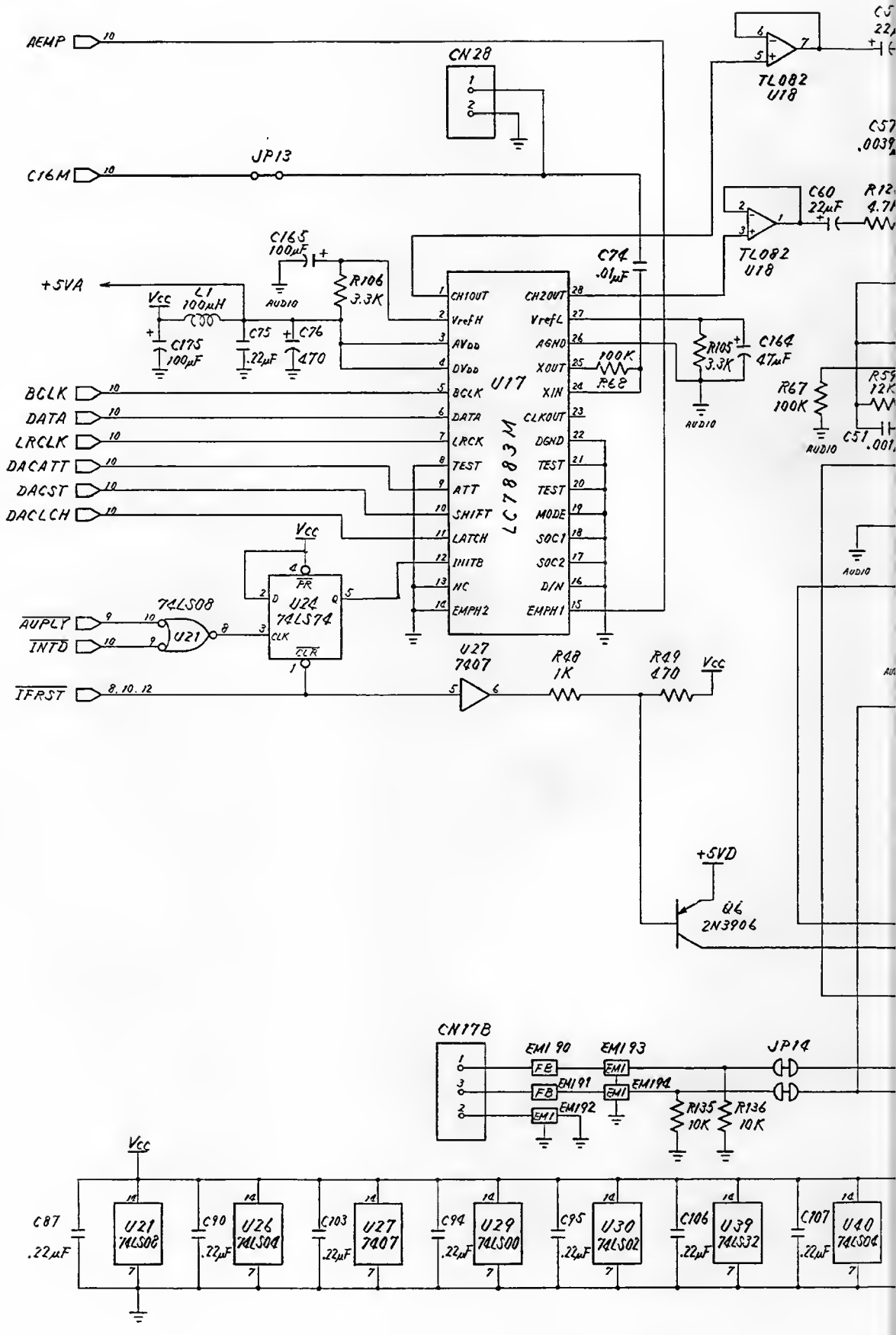

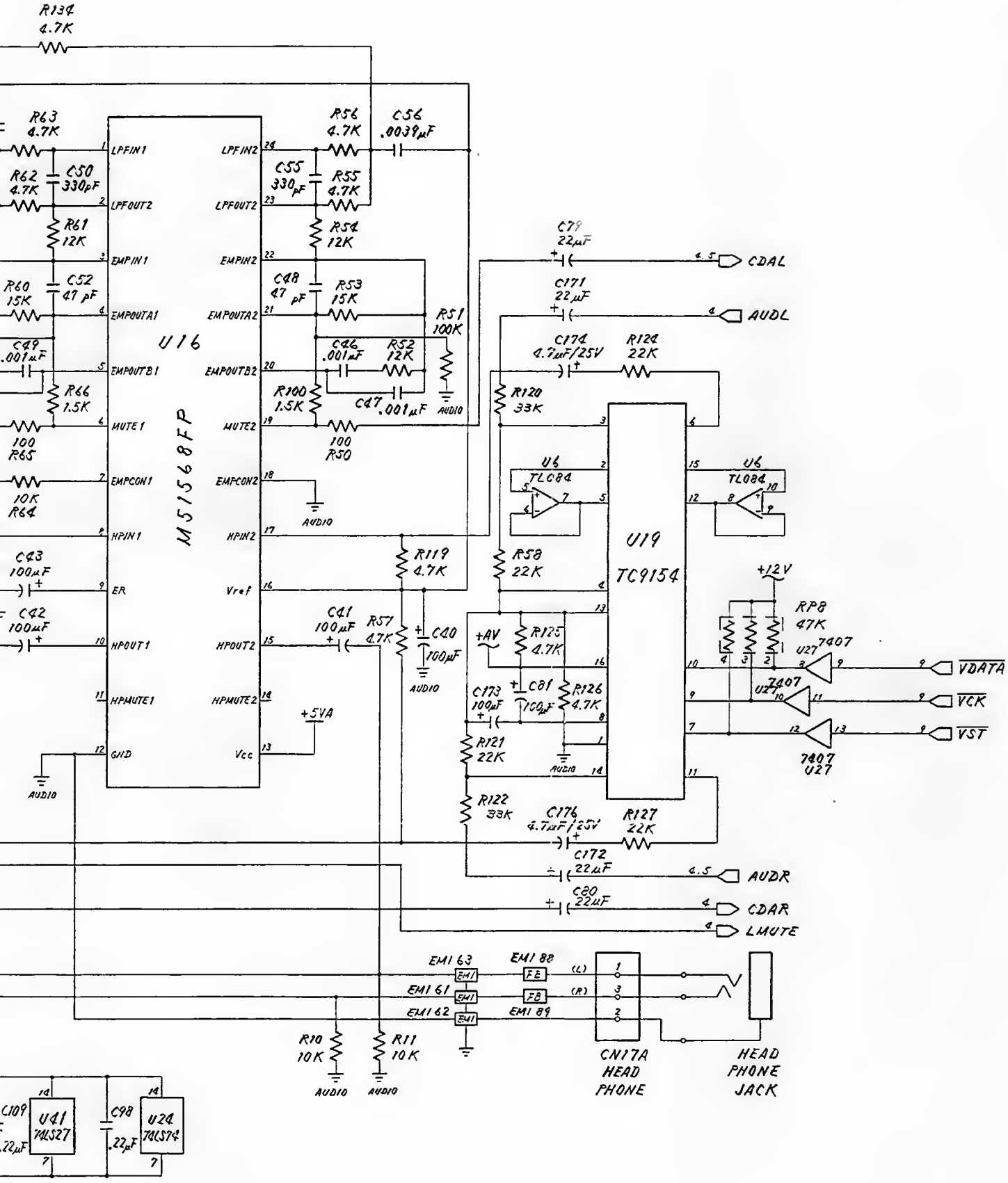
R134
4.7K
U16
M51568FP
LPFIN1
LPFOUT2
EMPIN1
EMPOUTA1
EMPOUTB1
MUTE1
EMPCON1
HPIN1
ER
HPOUT1
HPMUTE1
GND
LPFIN2
LPFOUT2
EMPIN2
EMPOUTA2
EMPOUTB2
MUTE2
EMPCON2
HPIN2
Vref
HPOUT2
HPMUTE2
Vcc
R63 4.7K
R62 4.7K
C50 330pF
R61 12K
C52 47 pF
R60 15K
C49 .001µF
R66 1.5K
100 R65
10K R64
C43 100µF
C42 100µF
R56 4.7K
C56 .0039µF
C55 330pF
R55 4.7K
R54 12K
C48 47 pF
R53 15K
C46 .001µF
R52 12K
R51 100K
R100 1.5K
C47 .001µF
100 R50
AUDIO
C79 22µF
C171 22µF
C174 4.7µF/25V
R124 22K
R120 33K
U6 TL084
U19 TC9154
R119 4.7K
R58 22K
C41 100µF
R57 4.7K
C40 100µF
+AV
R125 4.7K
C173 100µF
C81 100µF
R126 4.7K
R121 22K
R122 33K
C176 4.7µF/25V
R127 22K
C172 22µF
C80 22µF
+12V
RP8 47K
U27 7407
+5VA
CDAL
AUDL
AUDR
CDAR
LMUTE
VDATA
VCK
VST
EMI63
EMI61
EMI62
EMI88
EMI89
FB
(L)
(R)
R10 10K
R11 10K
CN17A HEAD PHONE
HEAD PHONE JACK
C109
U41 74LS27
C98 .22µF
U24 74LS74

Schematic #252605, Rev. A
Sheet 12 of 12

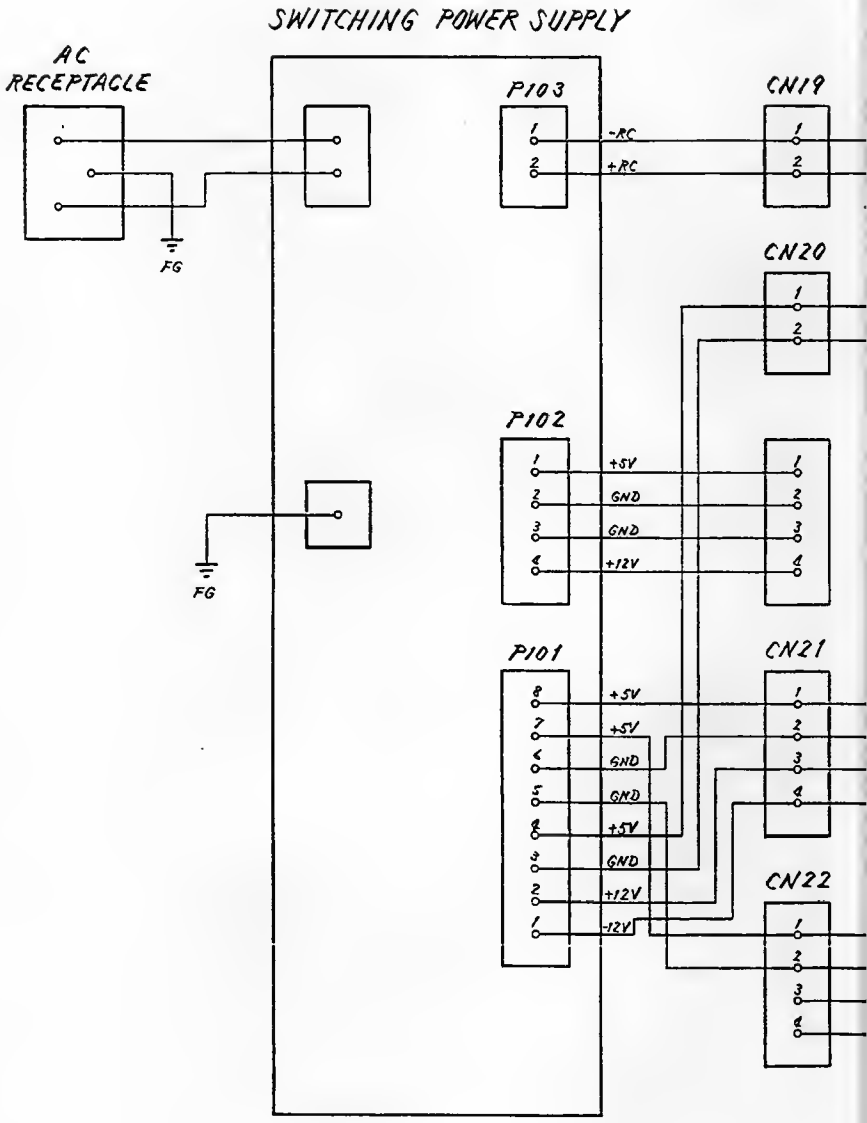

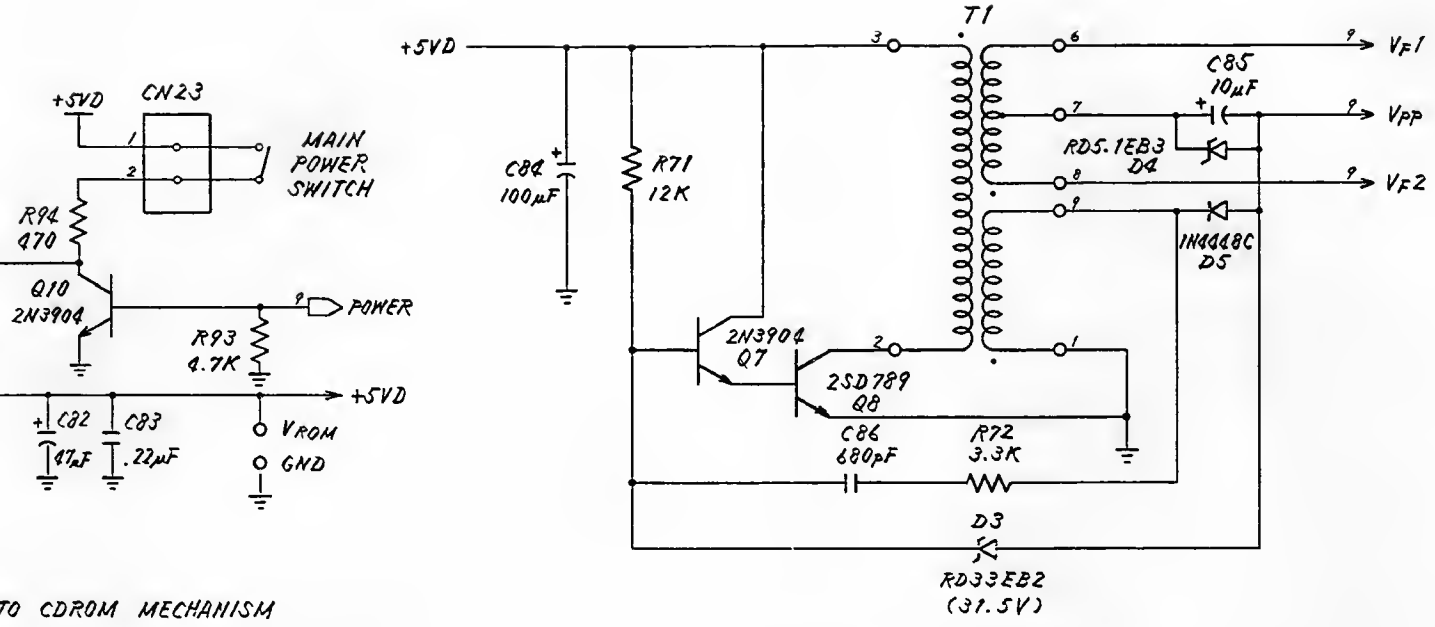

POWER, DISPLAY

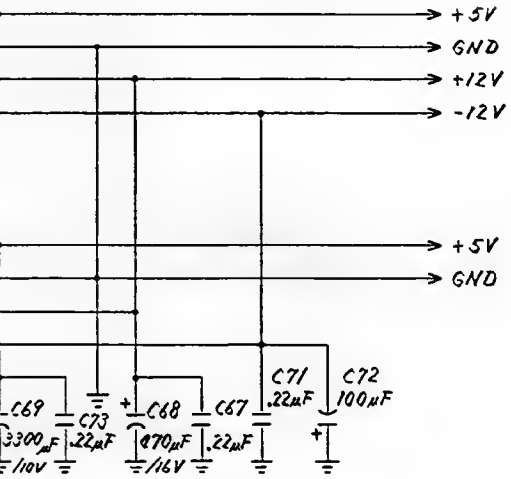

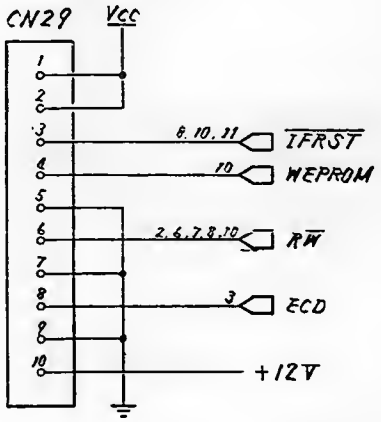

Commodore

Technical Training
Friedrich-Seele-Straße 10
3300 Braunschweig

Tel.: (05 31) 89 50 63 • Fax: (05 31) 8 57 74